NEPTŪN LIGHT

INDUCTION
COBRA HEAD STREET FIXTURES

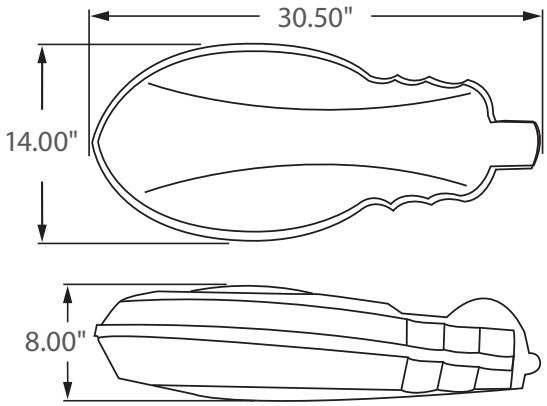

Dark Sky FRIENDLY

Incredible 100,000 hrs

GENERAL DESCRIPTION

Neptun's Induction cobra head fixture combines classic form and versatility to make it an excellent choice for new construction or retrofit applications. The 82 series fixture is offered in a variety of wattages to provide maximum flexibility in all types of applications. It can replace existing HID & HPS fixtures up to 250W.

APPLICATION

- Street Lighting
- Walkway Lighting
- Parking Lot Lighting
- Storage Area Lighting
- Security Lighting

STRUCTURE, MATERIALS, & FEATURES

- Heavy-gauge, die-cast aluminum housing.
- Custom designed anodized aluminum reflectors for superior illuminance.
- Heat and impact resistant tempered glass lens.
- Corrosion resistant electrocoat grey finish (custom colors available).
- Toolless entry housing for easy installation and maintenance.
- Hinged aluminum door frame incorporates stainless steel hardware.
- Continuous silicone gasketing surrounds lens for weather - tight seal.
- Inductively coupled rectangle induction bulb.
- High power factor, low THD Ballast with surge protection.
- Instant-On flicker-free Cold Start and Hot Re-Start.
- High quality glare-free light with high CRI above (83).
- Bright white light (5000˚K) for greater visibility and safety.
- Advance phosphors for high lumen output and high lumen maintenance.
- Up to 20 year maintenance free operation with 10 Year Warranty.
- **Optional**: 0-10V Dimming, Remote Monitoring and ON/ OFF Control, DC 24V Operation - Solar Compatible

ORDERING INFORMATION

Sample Number: 82040-UNV-0-10VDIM-850-LD-GRY
Custom options and accessories available. Please consult factory

Series	Wattage	Voltage	Options	Color Temp	Accessories	Color
82 = Street Light	**040** = 40 W **080** = 80 W **100** = 100 W **120** = 120 W	**UNV** = 120-277 VAC **24VDC** = 24V DC	**0-10VDIM** = 0-10V Dimming * Contact Factory for dimming options	**830** = 3000°K **841** = 4100°K **850** = 5000°K * * Standard	**LD** = NEMA Twist-Lock Photocell	**GRY** = Grey * Custom Colors Available

lightinnovations@work™

NEPTŪN LIGHT

INDUCTION
COBRA HEAD STREET FIXTURES

PRODUCT INFORMATION

Model No.	Description	Rated Watts	Input Watts	Initial Lumens	Universal Line Voltage (VAC)	Max Line Current (Amp) @ 120 - 277	THD	Power Factor	Weight
82040-UNV	Cobra Head Fixture	40	41	3,200	120-277	0.35-0.15	<10%	0.98	18 lbs
82080-UNV	Cobra Head Fixture	80	82	6,400	120-277	0.69-0.30	<10%	0.98	20 lbs
82100-UNV	Cobra Head Fixture	100	105	8,000	120-277	0.87-0.37	<10%	0.98	20 lbs
82120-UNV	Cobra Head Fixture	120	125	9,600	120-277	1.05-0.45	<10%	0.98	20 lbs

SPECIFICATIONS

- Ballast Type ..... Electronic
- Start Method ..... InstantON
- Hot Re-start ..... InstantON
- Universal Input Line Voltage ..... 120-277 VAC
- Input Line Frequency ..... 50/60 Hz
- Lamp Operating Frequency ..... 250 kHz
- Ballast Off-State Draw ..... 0 Watts
- Sound Rating ..... Class A
- ANSI Surge Protection ..... Class A
- Lamp / Ballast System Life ..... 100,000 Hrs.
- Lumen Maintenance @75,000Hrs ..... > 70%
- Color Temperature ..... 5000°K
- Color Rendering Index (CRI) 83
- Minimum Starting Temperature ..... -20°F
- Maximum Starting Temperature ..... 160°F
- Lumens per Watt 80
- Shock / Vibration Resistant ..... Yes
- Power Factor ..... > 0.98
- Total Harmonic Distortion ..... < 10%
- Inrush Current Peak ..... < 10 Amp
- ETL Listed / UL Standard 1598 ..... Yes
- FCC Compliance ..... Part 18, Subp. C
- EPA Rating 1.69
- IP Rating IP65
- Warranty ..... 10 Year

MOUNTING OPTIONS

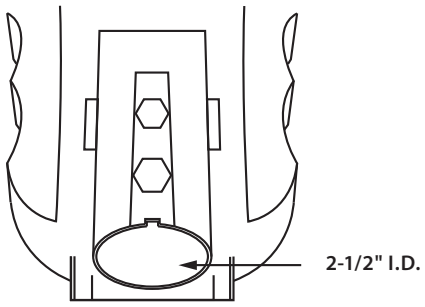

Accepts 1-1/4" - 2-3/8" Round Pipe

PHOTOMETRICS (See Complete IES File)

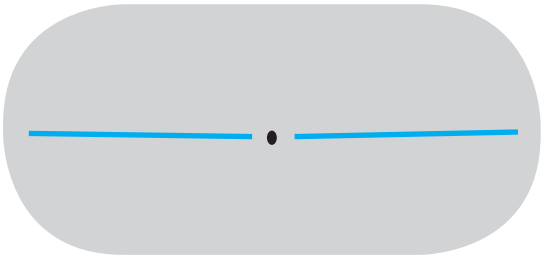

Type II Distribution

Neptun Light, Inc. reserves the right to change materials or modify the design of its product without notification as part of the company's continuing product improvement program.
©2002-2013 Neptun Light, Inc. All rights reserved.