NEPTŪN
LIGHT

# INDUCTION
## 25" HIGH-BAY FIXTURES

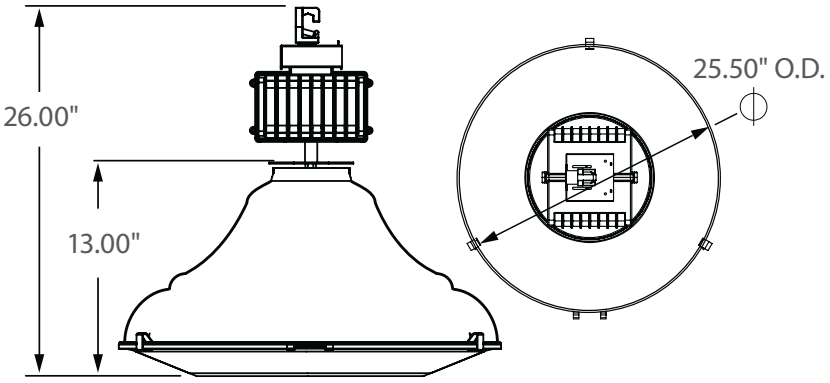


**Incredible 100,000 hrs**

## GENERAL DESCRIPTION

Neptun's Induction 25" Aluminum High-Bay fixtures combine architectural design and versatility to make it an excellent choice for new construction or retrofit applications. The 25" housing features a drop polycarbonate lens for increased light spread. The inside of the hood utilizes a high reflective white paint for increased illuminance. It is offered in a variety of wattages to provide maximum flexibility in all types of applications. It can replace existing HID & HPS fixtures up to 1000W.

## APPLICATION

- Warehouse Lighting
- Factory Lighting
- Retail Lighting
- Showroom Lighting
- Grocery Store Lighting
- Area & Storage Lighting
- Gymnasium Lighting

## STRUCTURE, MATERIALS, & FEATURES

- 25" high reflectance White Aluminum hood.
- Corrosion resistant die-cast aluminum gear box with white electrocoat finish.
- High efficiency, heat and impact resistant, UV protected, non yellowing polycarbonate drop lens.
- Inductively coupled circular induction bulb.
- High power factor, low THD electronic ballast with surge protection.
- Instant-On flicker-free Cold Start and Hot Re-Start.
- High quality glare-free light with high CRI above (83).
- Bright white light (5000˚K) for greater visibility and safety.
- Advance phosphors for high lumen output and high lumen maintenance.
- Up to 20 year maintenance free operation.
- 10 Year Warranty.

## ORDERING INFORMATION

Sample Number: 25200-WH-UNV-850-MD-C3
Custom options and accessories available. Please consult factory

| Series | Lamp Wattage | Reflector Type | Voltage | Color Temp | Accessories | Options |
|---|---|---|---|---|---|---|
| **25** = 25" High Bay | **200** = 200 W<br>**250** = 250 W<br>**300** = 300 W<br>**400** = 400 W<br>**500** = 500 W | **WH** = White | **UNV** = 120-277 VAC<br>**347V** = 347 VAC<br>**480V** = 480 VAC | **830** = 3000°K<br>**841** = 4100°K<br>**850** = 5000°K *<br>* Standard | **LD-120V** = Photocell for 120V<br>**LD-277V** = Photocell for 277V<br>**MD** = Motion Sensor Detector | **C3*** = 3' Cord-No Plug (other lengths available by specifying cord length C6 = 6' cord)<br>**PC3** = 3' Cord with NEMA Plug (verify plug type when ordering)<br>* Standard<br>** Fixture ships with polycarbonate lens |

*lightinnovations@work™*

NEPTUN LIGHT

# INDUCTION
## 25" HIGH-BAY FIXTURES

## PRODUCT INFORMATION

| Model No. | Description | Rated Watts | Input Watts | Initial Lumens | Universal Line Voltage (VAC) | Max Line Current (Amp) @ 120 - 277 | THD | Power Factor | Weight |
|---|---|---|---|---|---|---|---|---|---|
| 25200-WH-UNV | 25" High-Bay Fixture | 200 | 210 | 16,000 | 120-277 | 1.75-0.75 | <10% | 0.98 | 38 lbs |
| 25250-WH-UNV | 25" High-Bay Fixture | 250 | 262 | 20,000 | 120-277 | 2.18-0.94 | <10% | 0.98 | 38 lbs |
| 25300-WH-UNV* | 25" High-Bay Fixture | 300 | 315 | 24,000 | 120-277 | 2.62-1.31 | <10% | 0.98 | 40 lbs |
| 25400-WH-UNV* | 25" High-Bay Fixture | 400 | 420 | 32,000 | 120-277 | 3.50-1.51 | <10% | 0.98 | 40 lbs |
| 25500-WH-UNV* | 25" High-Bay Fixture | 500 | 525 | 40,000 | 120-277 | 4.37-1.89 | <10% | 0.98 | 40 lbs |

*** Features dual bulbs & ballasts**

## SPECIFICATIONS

- Ballast Type ..... Electronic
- Start Method ..... InstantON
- Hot Re-start ..... InstantON
- Universal Input Line Voltage ..... 120-277 VAC
- Input Line Frequency ..... 50/60 Hz
- Lamp Operating Frequency ..... 250 kHz
- Ballast Off-State Draw ..... 0 Watts
- Sound Rating ..... Class A
- ANSI Surge Protection ..... Class A
- Lamp / Ballast System Life ..... 100,000 Hrs.
- Lumen Maintenance @75,000Hrs ..... > 70%
- Color Temperature ..... 5000°K
- Color Rendering Index (CRI) ..... 83
- Minimum Starting Temperature ..... -20°F
- Maximum Starting Temperature ..... 160°F
- Lumens per Watt ..... 80
- Shock / Vibration Resistant ..... Yes
- Power Factor ..... > 0.98
- Total Harmonic Distortion ..... < 10%
- Inrush Current Peak ..... < 10 Amp
- ETL Listed / UL Standard 1598 ..... Yes
- FCC Compliance ..... Part 18, Subp. C
- IP Rating ..... IP43
- Warranty ..... 10 Year

## MOUNTING OPTIONS

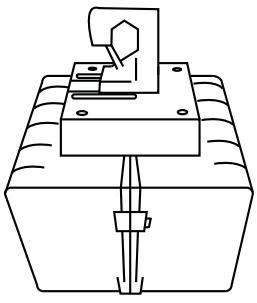

Hook Mount (Standard)

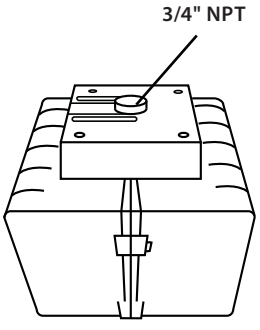


Pendant Mount

## PHOTOMETRICS (See Complete IES File)

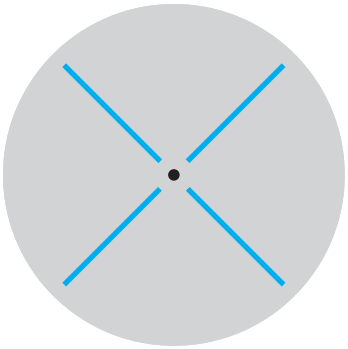

Type V Distribution

Neptun Light, Inc. reserves the right to change materials or modify the design of its product without notification as part of the company's continuing product improvement program.
©2002-2013 Neptun Light, Inc. All rights reserved.