LED SION

3FL Watt&CCT Tunable FLOOD LIGHT





Date: ---------- Location: ----------

Product: ---------- Project: ----------

Quantity: ---------- Catalog# ----------

FEATURES

- Tunable power, selectable color, on/off photocell.
- Knuckle mounts, yoke mounts available. easy install
- 100/130/150w comes Interchangeable Optical Lenses, work at both wide-area and focused applications.
- Superior thermal management ensures stable performance and extended LED lifespan.
- DLC UL LISTED, 5 Years Warranty

SUITABLE APPLICATIONS

- Warehouses
- Factories
- Parking Lots
- Shopping Malls
- Supermarkets
- Logistic Centers

CONSTRUCTION:

This advanced flood light features wattage & CCT and lens tunability to deliver precise performance across diverse environments, combining a heavy-duty, long-lasting housing with superior thermal management for exceptional reliability, while its interchangeable optics and versatile mounting options make it adaptable for sports fields, warehouses, building exteriors, and general outdoor lighting applications, providing a single, solid, high-performance solution that reduces SKUs and meets a wide range of professional lighting needs.

ELECTRICAL:

120–277V input, operating temperature: -40° F-104° F

INSTALLATION&MOUNTING:

Knuckle mounts, yoke mounts optional for easy installation..

WARRANTY:

5-year limited warranty. Actual performance may differ as a result of end-user environment and application.

PERFORMANCE

Model NO	Power Switchable	Beam angle	Handle Type	Voltage/CurrentInput		Light Efficiency	Kelvin Options
				120V	277V		
TS-FL0903-35W-80*110-H-TCP(PTC)	15W/25W/35W	110°	Knuckle	0.1/0.2A/0.3A	0.06A/0.09A/0.1A	125LM/W	3000K/4000K/5000K
TS-FL0908-80W-80*110-H-TCP(PTC)	40W/60W/80W	110°	Knuckle	0.3A/0.5A/0.6A	0. 1A/0.2A/0.3A	125LM/W	3000K/4000K/5000K
TS-FL1115-150W-90-H-TCP(PTC)	100W/130W/150W	60°/75°/90°	Yoke	0.8A/1.0A/1.2A	0.3A/0.4A/0.5A	125LM/W	3000K/4000K/5000K

3FL Watt&CCT Tunable FLOOD LIGHT

LIGHTING

OPTIONAL ACCESSORIES

Open hole for Power Switchable



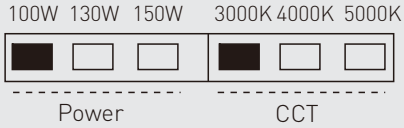

The lamps have the function of adjusting power and color temperature

PRODUCT ORDERING GUIDE

TS-FL0903-35W-80*110-H-TCP(PTC)

1	2	3	4	5
TS	– FL0903	– 35W	– 80*110	– H-TCP(PTC)

☑ TS	Factory Code
☑ Fl0903	Stands For The 0903 Series Floodlights.
☑ 35W	35W, Maximum Power 35W
☑ 80*110	Light distribution type
☑ H-TCP(PTC)	Watt&CCT Tunable

Electric Characteristic

Specification/Model	TS-FL0903-35W-80*110-H-TCP(PTC)	TS-FL0908-80W-80*110-H-TCP(PTC)	TS-FL1115-150W-90-H-TCP(PTC)
LED Driver	UL-listed 0-10V Dimmable LED Driver		
Input power	15W/25W/35W	40W/60W/80W	100W/130W/150W
Lumens output	1875LM/3125LM/4375LM	5000LM/7500LM/10000LM	12500LM/16250LM/18750LM
Efficiency	125LM/W	125LM/W	125LM/W
CRI	＞72	＞72	＞72
CCT Tunable	30K/40K/50K	30K/40K/50K	30K/40K/50K
Input Voltage	120-277VAC	120-277VAC	120-277V/120-347VAC
Light distribution type	110°	110°	60°/75°/90°
Working Temperature	-40° F-104° F	-40° F-104° F	-40° F-104° F
Junction Temperature	＜75℃	＜75℃	＜75℃
Lamp Efficiency	≥90%	≥90%	≥90%
Certificate	UL CUL DLC	UL CUL DLC	ETL CETL DLC
Equivalent	30-105WMH/HPS	80-300WMH/HPS	200-500WMH/HPS

DIMENSION

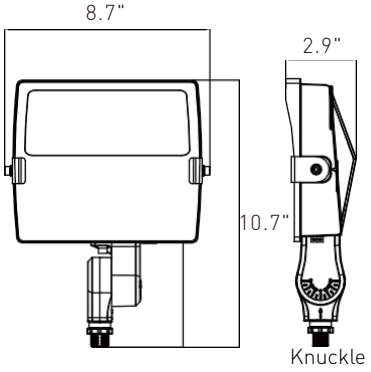

TS-FL0903-35W-80*110-H-TCP(PTC)

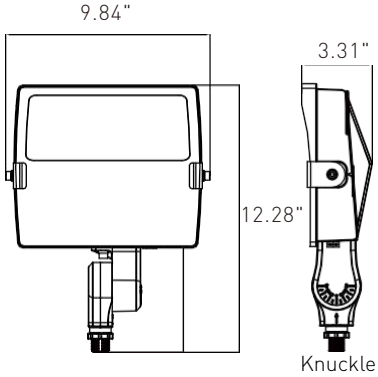

TS-FL0908-80W-80*110-H-TCP(PTC)

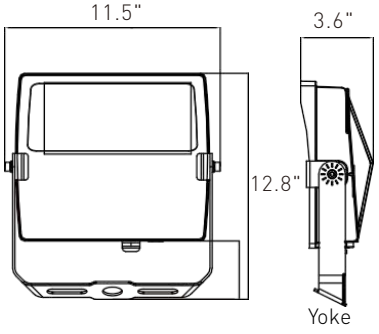

TS-FL1115-150W-90-H-TCP(PTC)

DISTRIBUTIONDIAGRAM

TS-FL0903-35W-80*110-H-TCP(PTC)

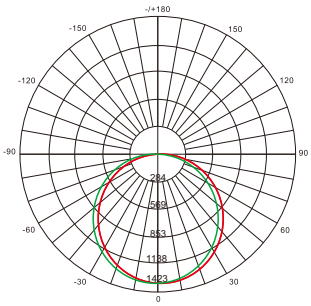

AVERAGE BEAM ANGLE(50%): 110°

UNIT:CD

Lumens:1875LM
Test Number:15W
Test Number:5000K

C0/180,112.9
C30/210,111.5
C60/240,109.7
C90/270,110.1

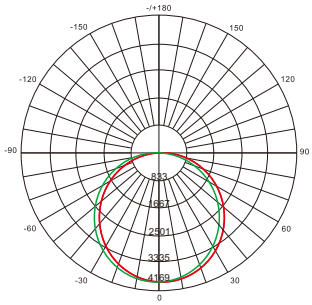

AVERAGE BEAM ANGLE(50%):110°

UNIT:CD

Lumens:3125LM
Test Number:25W
Test Number:5000K

C0/180,113.5
C30/210,111.8
C60/240,111.9
C90/270,110.3

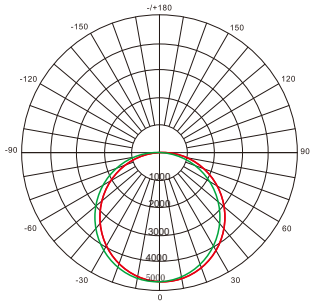

AVERAGE BEAM ANGLE(50%): 110°

UNIT:CD

Lumens:4375LM
Test Number:35W
Test Number:5000K

C0/180,114.5
C30/210,112.2
C60/240,111.6
C90/270,113.3

TS-FL0908-80W-80*110-H-TCP(PTC)

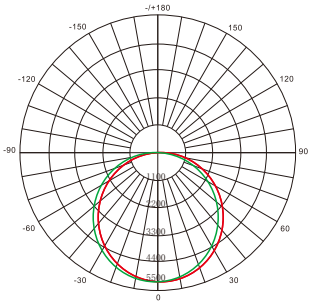

AVERAGE BEAM ANGLE(50%): 110°

UNIT:CD

Test Number:
Lumens:5000LM
Test Number:40W
Test Number:5000K

C0/180,112.9
C30/210,111.5
C60/240,109.7
C90/270,110.1

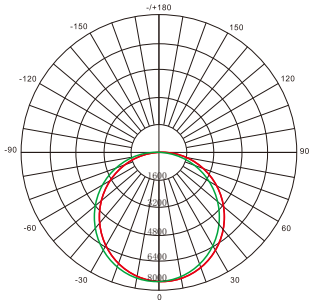

AVERAGE BEAM ANGLE(50%):110°

UNIT:CD

Lumens:7500LM
Test Number:60W
Test Number:5000K

C0/180,113.5
C30/210,111.8
C60/240,111.9
C90/270,110.3

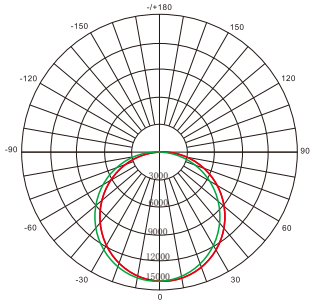

AVERAGE BEAM ANGLE(50%): 110°

UNIT:CD

Lumens:10000LM
Test Number:80W
Test Number:5000K

C0/180,114.5
C30/210,112.2
C60/240,111.6
C90/270,113.3

TS-FL1115-150W-90-H-TCP(PTC)

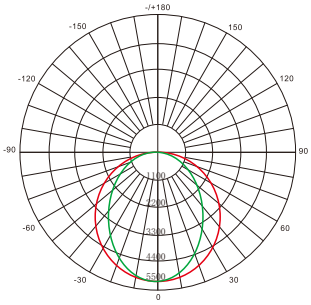

AVERAGE BEAM ANGLE(50%): 90°

UNIT:CD

Lumens:12500LM
Test Number:100W
Test Number:5000K

C0/180,90.9
C30/210,111.5
C60/240,90.1
C90/270,110.1

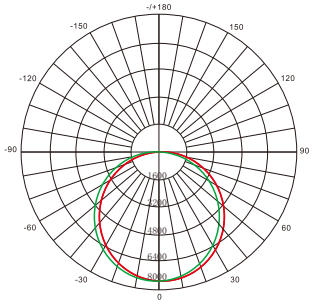

AVERAGE BEAM ANGLE(50%):90°

UNIT:CD

Lumens:16250LM
Test Number:130W
Test Number:5000K

C0/180,90.9
C30/210,111.5
C60/240,90.1
C90/270,110.1

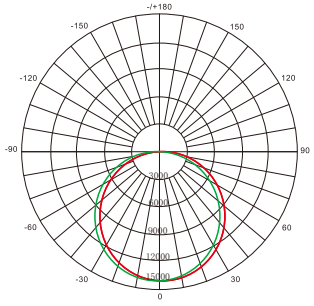

AVERAGE BEAM ANGLE(50%): 90°

UNIT:CD

Lumens:18750LM
Test Number:150W
Test Number:5000K

C0/180,90.9
C30/210,111.5
C60/240,90.1
C90/270,110.1

Installation instruction:

Installation instruction:(Kunckle)

1. Use screw key to open the junction- box.

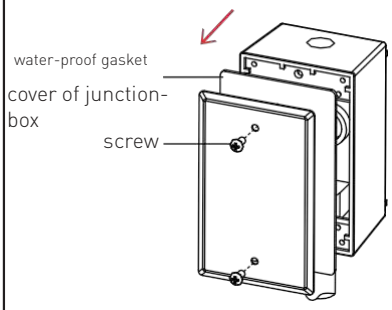

2.Put the wires ofl amp into the junction-box.

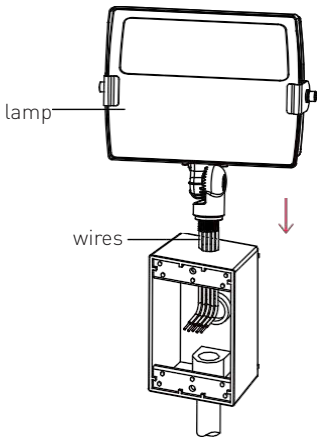

3.Tighten the knuckle mount into the junction box

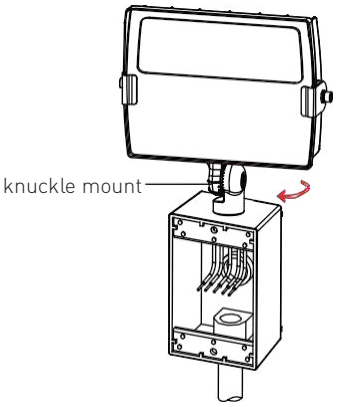

4.Use wire nuts to connect the lamp wires to the junction box.

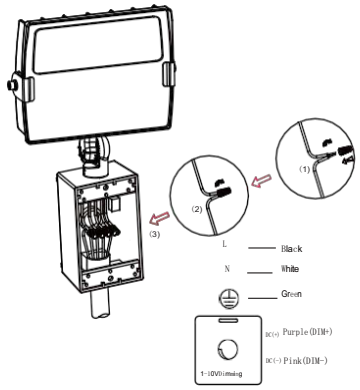

5. Lock the junction-box with screw key

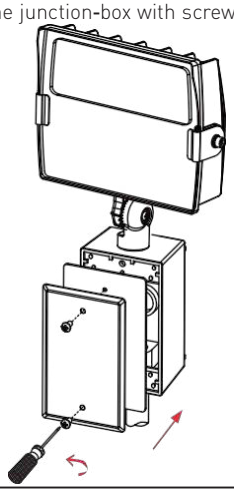

6.Use a hex key to unscrew the hex screw on the knuckle mount.

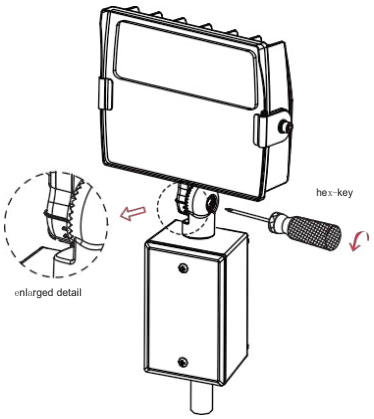

7.Adjust the lamp to a suitable angle.

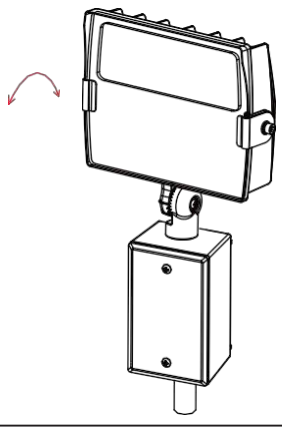

8.Use hex-key to screw up the hex-crew
Installation completed.

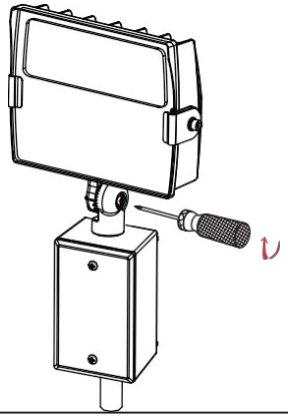

3FL Watt&CCT Tunable FLOOD LIGHT

LIGHTING

Installation Instruction (Yoke)

1.Mark the positions of the mounting holes using the light bracket, then drill the holes.

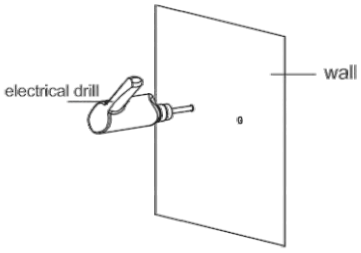

2.Insert the externally threaded bolts into the pre-drilled holes, as shown in the picture below.

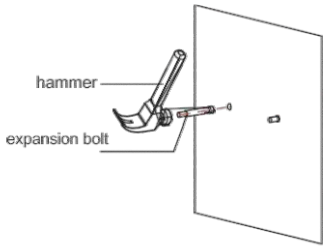

3.Fasten the bracket tightly against the wall using the threads.

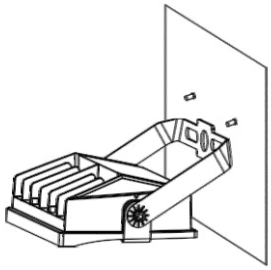

4.Fasten the screw nut clockwise with the supplied wrench and hardware.

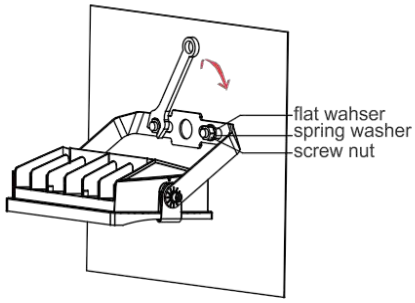

5.Rotate the light to the proper angle and tighten the screws.

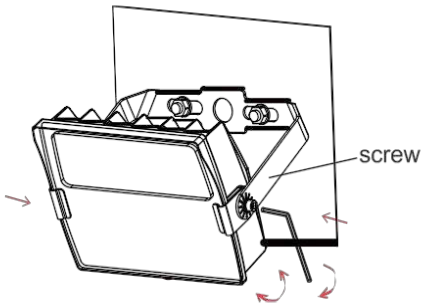

6.Tighten both side screws with an Allen driver.

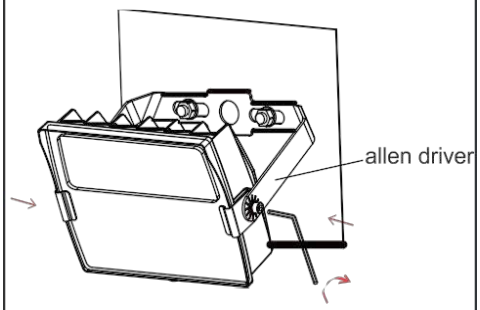

7.Connect the wires.

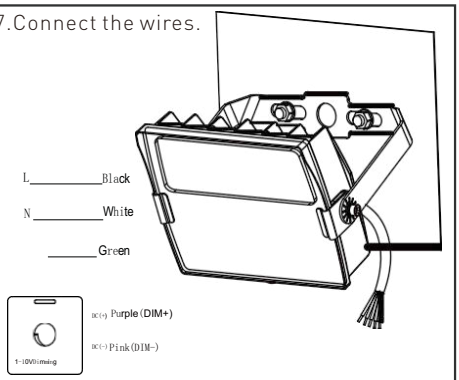

Step of adjusting Power

Step 1: Put the front of fixture downward,then twistout the cover with a cross screwdriver.

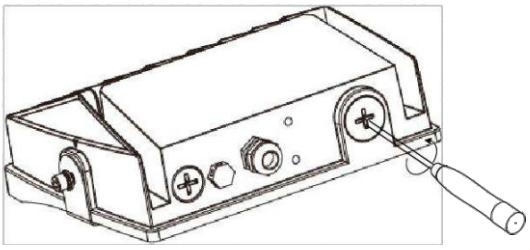

Step 2: Remove the cover and set it aside temporarily.

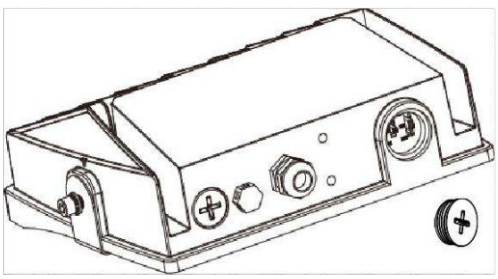

Step 3: Select the desired color temperature and wattage.

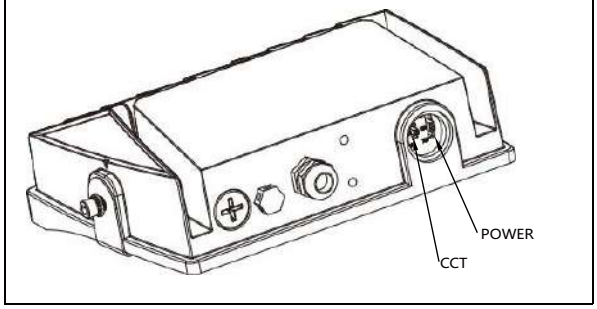

Step 4: Reattach the cover to the fixture.

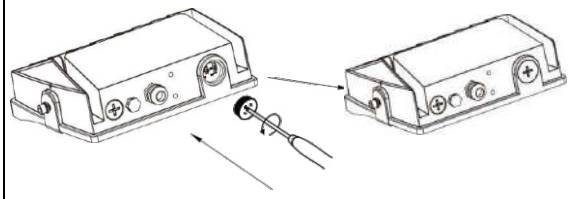

Procedure for adjusting the beam angle

Step 1: Place the fixture face down, then remove the cover using a Phillips screwdriver.

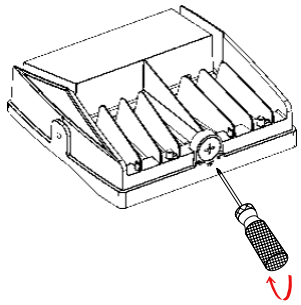

Step 2: Remove the cover and set it aside temporarily.

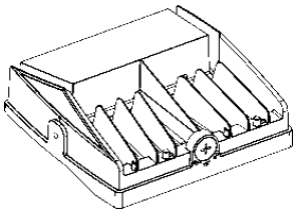

Step 3: Select the desired beam angle.

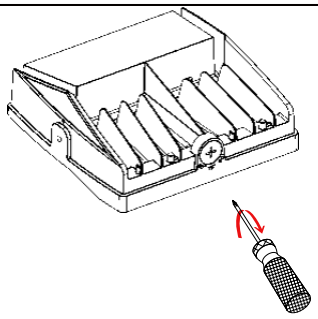

Step 4: Reattach the cover to the fixture.

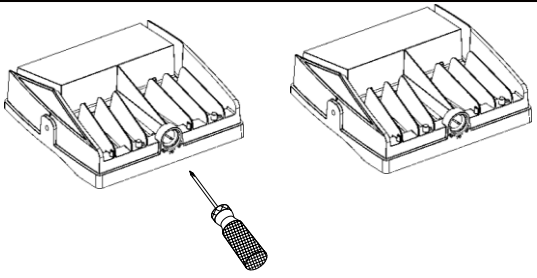

NOTE

1. Only qualifed electrician can carry out the electrical work;
2. Please turn off the power supply in any abnormal situation;
3. Please clean the floodlight shel;
4. Please do not wipe with water or caustic solution;
5. Be sure to ground the fixture;
6. Be careful when using and storing;
7. Avoid high voltage working