CLP-3075 Series

LED Area Fixture

DESIGN - QUALITY

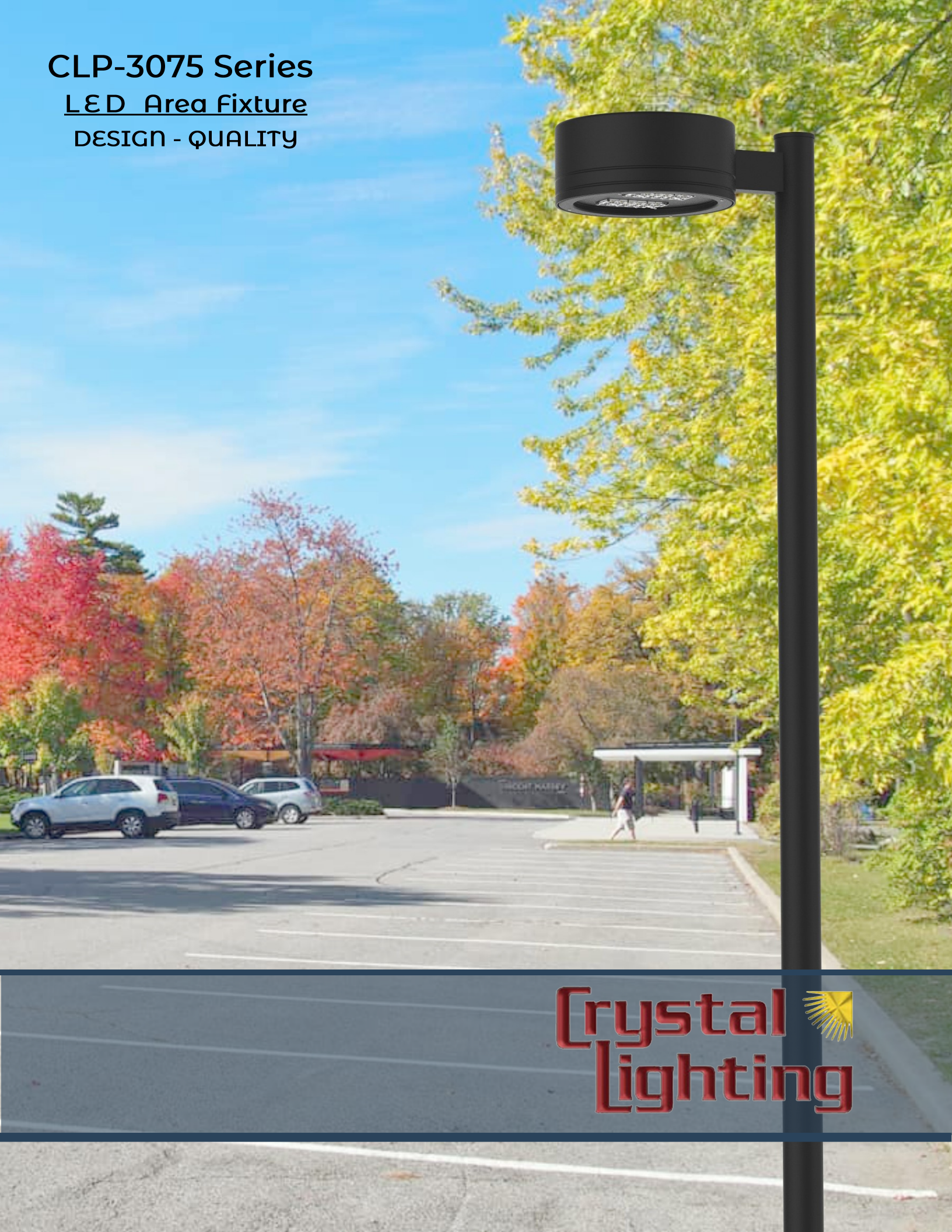

Crystal Lighting

CLP-3075 Area LED Fixture

CLP-3075 LED Area LED fixture, suitable for wet locations. Perfect for lighting up residential exteriors, walkways, entry ways, perimeters, sto rage areas, parking garages, school campuses, Industrial/commercial spaces, wall washer, parking lots, recreational parks. This fixture has a wide light distribution. Comes with a 10 year/100,000 hour limited warranty.

FEATURES

- Energy Savings: Over 66% compared to HID light sources
- Improved lumen maintenance
- Utilizes high efficient Phillips Lumiled LED's
- Operating temperatures: -30°C ~ 60°C
- Driver: Constant current, 120-277v or 480v (Optional)
- IP-66 Rated
- Dimming, Occupancy Sensors, Photo Cell and Wireless Controls (Optional)
- Operating Life: >60,000 hours

COSTRUCTION.

- Housing is heavy-duty spun aluminum & hinged front door frame.
- Powder coat finish
- Clear glass lens standard, prismatic glass lens optional
- Silicone gasket to prevent leakage and provide weather-tight protection.
- Mounting: Arm Mount, Spider Mount, Yoke Mound, (SM and YM 3" O.D Standard)

Example: (CLP-3075-120CLED-50-MV-T5-BZ-WC)

MODEL	WATTS	OPTIC TYPE	COLOR TEMP	VOLTAGE	FINISH	MOUNTING	OPTIONS
CLP-3075	20W (20CLED) 40W (40CLED) 60W (60CLED) 80W (80CLED) 100W (100CLED) 120W (120CLED)	TYPE 2 (T2) TYPE 3 (T3) TYPE 4 (T4) TYPE 5 (T5)	3000K (30K) 4000K (40K) 5000K (50K)	120-277V (MV) 377V (347) 480V (480)	BLACK (BLK) WHITE (WH) BRONZE (BRZ) SILVER (SIL) GRAPHITE (GPH) MARINE GRADE (MG)	6" EXTRUDED ARM (EA6) 10" EXTRUDED ARM (EA10) 12" EXTRUDED ARM (EA12) AEA-ADJUSTABLE EXTRUDED ARM (AEA) SPIDER MOUNT (SM) YOKE MOUNT (YM) 6" EXTRUDED ARM WALL MOUNT (6EAWM)	MOTION SENSOR (OCC) BUTTON PHOTO CELL (PC) EMR BATTERY (EMR) HOUSE SIDE SHIELD (HSS) WIRELESS CONTROL (WC)

ARM MOUNT

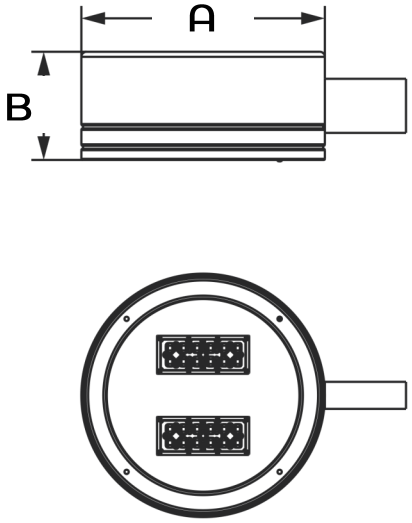

SPIDER MOUNT

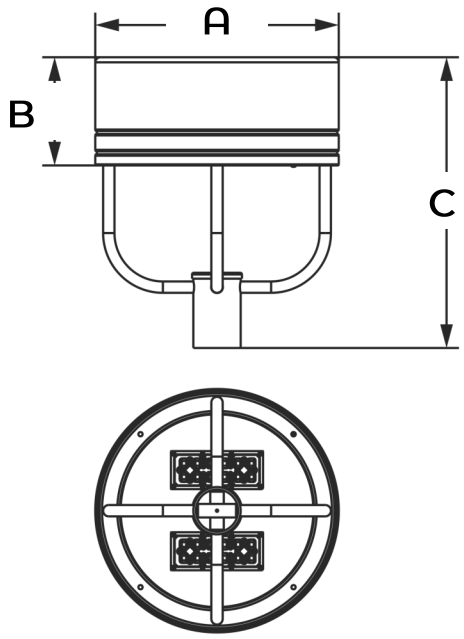

YOKE MOUNT

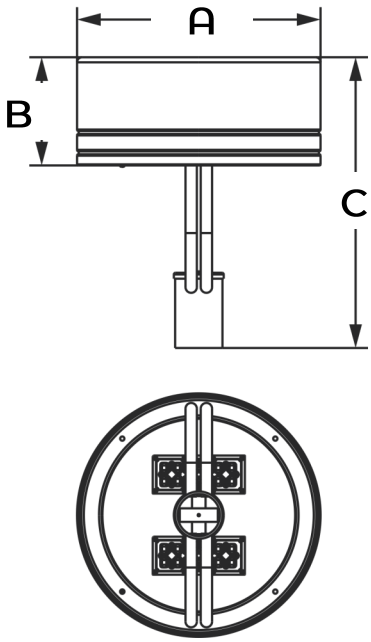

Shade Dimensions				EPA
CAT#	A	B	C	
CLP-3075-AM	18”	8”		1.16
CLP-3075-SM	18”	8”	21” 1/5	1.33
CLP-3075-YM	18”	8”	21” 1/5	1.22

CAT#:	INPUT POWER	LUMEN OUTPUT	LPW	COLOR-TEMP (CCT)	CRI	RATED LIFE (L70)	INPU VOLTAGE	INPUT FRE-QUENCY	HID Equivalent
CLP-3075	20CLED	3,650	182	5000K	70+	>200,000	120-277V	50/60HZ	35W MH
CLP-3075	40CLED	6,492	162	5000K	70+	>200,000	120-277V	50/60HZ	50WHPS
CLP-3075	60CLED	8,559	142	5000K	70+	>200,000	120-277V	50/60HZ	70W PSMH
CLP-3075	80CLED	12,714	158	5000K	70+	>200,000	120-277V	50/60HZ	150W HPS
CLP-3075	100CLED	14,265	142	5000K	70+	>200,000	120-277V	50/60HZ	150W HPS
CLP-3075	120CLED	17,118	142	5000K	70+	>200,000	120-277V	50/60HZ	250W HPS