Origin Series
Fully Selectable Area Light

Lighting Products®

PROJECT INFORMATION	
JOB NAME	
FIXTURE TYPE	Fully Selectable Area Light
CATALOG NUMBER	
APPROVED BY	



origin SERIES

DLC LISTED PREMIUM | c UL us LISTED | 5 YEAR WARRANTY | IP65 RATED

SPECIFICATIONS

Construction:
Designed for commercial and industrial applications, providing cooler operating temperatures, brighter light and longer LED life.

Die cast aluminum housing.

UV stabilized power coated finish.

PC Receptacle, Photocontrol and Shorting Cap included.

Optics:
Easy to switch, tool-free optics.

Type III is pre-installed, Type V is included in the carton.

Optics can be rotated right or left.

Selectable Lumen Outputs:

- 15,000 | 17,000 | 22,000
- 29,000 | 35,000 | 43,000

Mounting:
Multi-Mount Bracket enables pole and slipfitter mounting. Offers 180° of mounting angle adjustment.

Listings:
UL/cUL listed for wet locations

IP65 Rated

DesignLights Consortium qualified luminaire, eligible for rebates from DLC member utilities. *See chart on last page for qualifying products.*

AC Input: 120/208/240/277/347/480 V

Operating Range: -40°C to 50°C

Driver:
Constant current, 120-277 VAC, 50-60 Hz or 277-480 VAC, 50-60 Hz
O-State Power: 0 Watts
0-10 V Dimming

LEDs:
Selectable CCT: 3000K, 4000K and 5000K

Delivers 70% or greater of initial lumens at 50,000 hours[1]

Testing:
Atlas LED luminaires have been tested by an independent laboratory in accordance with IESNA LM-79 & LM-80.

Warranty: Five-year limited warranty

DIMENSIONS

ORASEL15-22L
Weight: 12.5 lbs.
EPA: 1.44

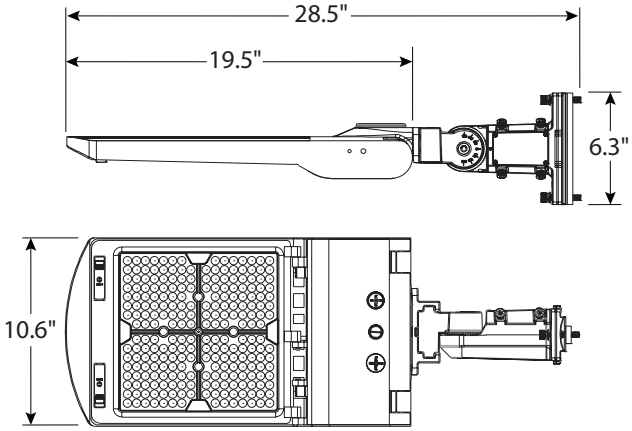

ORASEL30-43L
Weight: 14.8 lbs.
EPA: 1.91

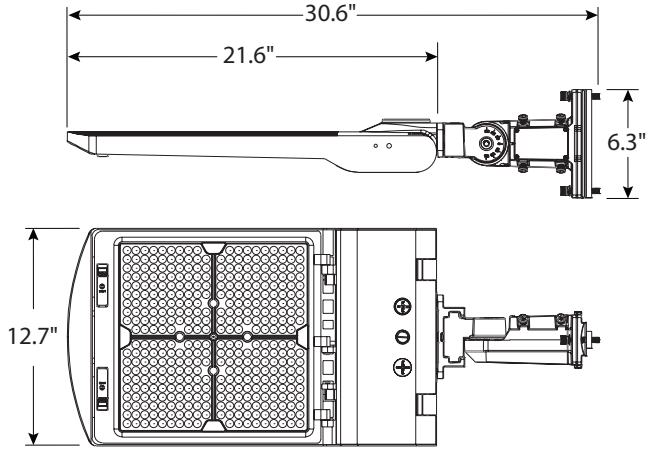

[1]*LED Life Span Based Upon LM-70 Test Results*

Rebates and Incentives are available in many areas.
Contact an Atlas Representative for more information.

Lighting Products®

Origin Series
Fully Selectable Area Light



ORDERING INFORMATION

ORA	SEL	15-22L			
PRODUCT SERIES	SELECTABLE	LUMEN PACKAGE	COLOR TEMP.	VOLTAGE	FIXTURE COLOR
ORA = Origin Area Light	SEL = Selectable	15-22L = 14,500 - 21,750 Lumens Selectable 30-43L = 29,000 - 43,500 Lumens Selectable	blank = Selectable 3000K, 4000K, 5000K	Blank = 120-277 4 = 347-480V	Blank = Bronze

PERFORMANCE DATA

Lumen Package	Distribution	CRI	3000K CCT		4000K CCT		5000K CCT		Wattage	Replaces Up To
			Delivered Lumens	Efficacy (LPW)	Delivered Lumens	Efficacy (LPW)	Delivered Lumens	Efficacy (LPW)		
SELECTABLE										
15-22L	T3	70	14,836	146	15,306	155	15,415	152	100	250W
	T5	70	15,390	152	15,908	159	16,104	157		
	T3	70	17,526	142	18,130	152	18,076	148	120	400W
	T5	70	17,979	148	18,670	157	18,817	153		
	T3	70	20,834	138	21,551	148	21,347	142	150	400W
	T5	70	22,349	142	23,287	152	23,205	145		
30-43L	T3	70	30,197	148	31,993	161	32,486	159	200	400W
	T5	70	30,514	152	32,318	164	32,996	163		
	T3	70	35,331	143	37,689	157	38,238	154	240	1000W
	T5	70	35,439	148	37,746	161	38,414	158		
	T3	70	41,560	138	44,839	154	45,503	151	300	1000W
	T5	70	43,145	143	45,695	157	46,111	152		

DLC PRODUCT INFORMATION

Unit	Voltage	DLC Product ID	Classification
ORASEL15-22L	120-277V	S-J67ZYX	Premium
ORASEL30-43L	120-277V	S-QGUL7O	Premium
ORASEL15-22L4	347-480V	S-BE83A5	Premium
ORASEL30-43L4	347-480V	S-3JPW9U	Premium

ACCESSORIES

PART NUMBER	DESCRIPTION	FINISH	STD. PKG.
ORASEL15-T	Trunnion Mount for 15-22L	Bronze	1
ORASEL30-T	Trunnion Mount for 30-43L	Bronze	1

DRILL PATTERN

