# CCT Tunable LED Troffer Light

## Product Description

LEDSION CCT tunable light use best die-casting aluminum+PC housing, anti-corrosion painting design. High-performance
Replace 50-150W MH/HPS.

## Advantage

- ETL, DLC Premium certificate
- Input voltage 100-277VAC.
- Multiple CCT Switchable
- 0-10V Dimming
- Aluminum Heatsink for Efficient Heat Dissipation
- Diffusers: extruded impact modified acrylic for increased durability

## Applications

Offices, schools, showrooms, airports, retail locations and healthcare facilities.

# CCT Tunable LED Troffer Light

## Specifications

| Model No. | DM-TR922XXW | DM-TR924XXW |
|---|---|---|
| Input Power | 30W | 40W |
| Lumen | 3900LM | 5200LM |
| Product size | 23.74” × 23.74”<br>(603×603mm) | 47.76”×23.74”<br>(1212×603mm) |
| Lumen Efficiency | 130lm/W | |
| Color Temperature | 3500K - 4000K - 5000K | |
| CRI | >80 | |
| Viewing Angle | 110 Degree | |
| Input Voltage | 100-277VAC 50/60Hz | |
| PF | ≥0.9 | |
| THD | ≤20% | |
| Driver Brand | China brand driver | |
| Dimmer | 0-10V Dimming | |
| Housing | Aluminum+PC | |
| Housing Color | White | |
| Waterproof Rating | DAMP (IP41) | |
| Operating Temperature | -40℃ TO 45℃ | |
| Operating Humidity | 20％-90％ RH | |
| Storage Temperature | -40℃ TO 80℃ | |
| Storage Humidity | 10％-95％ RH | |
| Warranty Time | 5 Years | |

## Photometrics

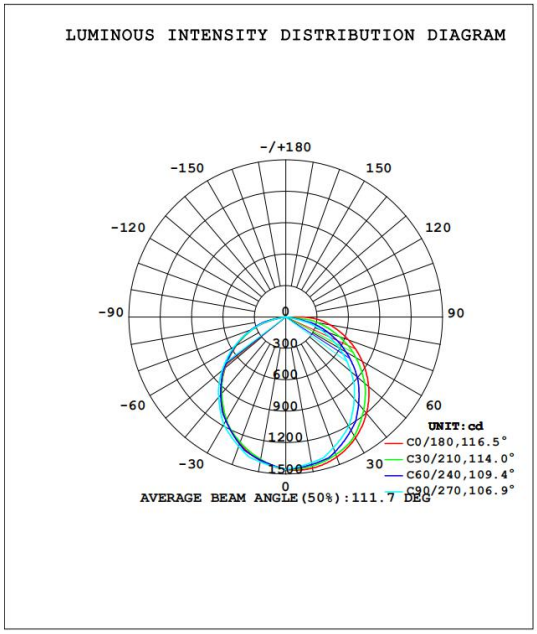


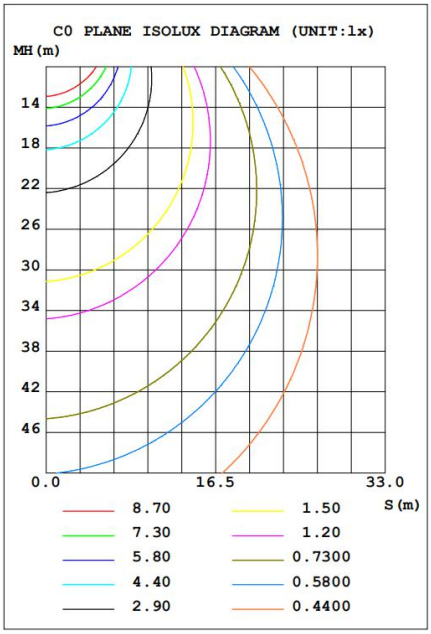

## Projected LED Lumen Maintenance

| Operating hours | 0 | 25000 | 50000 |
|---|---|---|---|
| Lumen maintenance factor | 1 | 0.91 | 0.8 |

Data references the extrapolated performance projections for the Linear Highbay LED platform in a 25°C ambient, based on 10,000 hours of LED testing (tested per IESNA LM-80-08 and projected per IESNA TM-21-11).

## Dimension

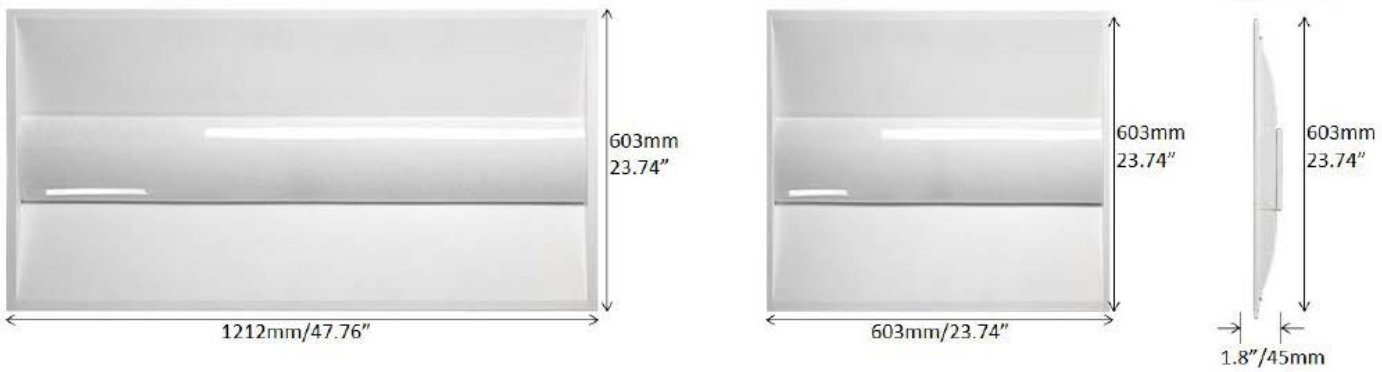

# CCT Tunable LED Troffer Light

## Packing

| Model | Length/cm | Width/cm | Height/cm | Qty/ctn | G.W/kg |
|---|---|---|---|---|---|
| 2x2 | 65.5 | 10.5 | 65.5 | 2 | 7 |
| 2x4 | 126 | 10.5 | 65.5 | 2 | 14.5 |

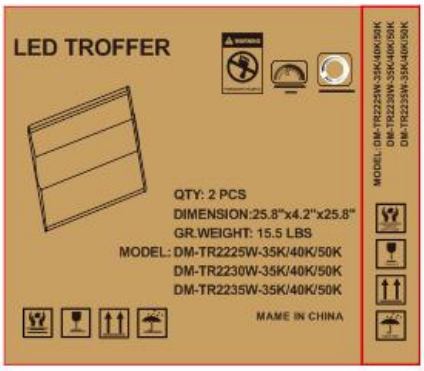


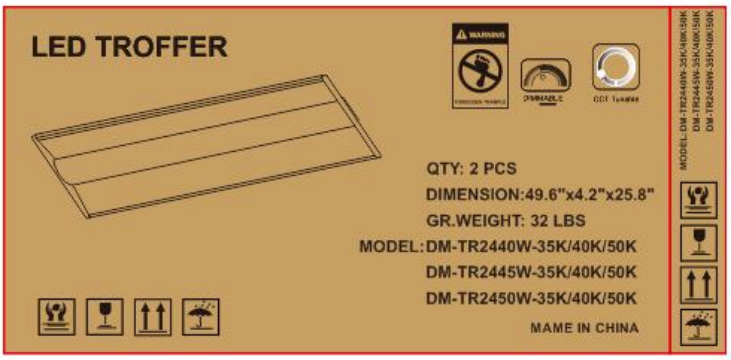


## Notice for User

Please turn off power before install or change assembly parts.
The input voltage and lamps should be matched, after connecting the power line,
Please make sure the wiring section is insulated.
No-professionals, must not install and disassemble the lamps.

## After-sale Service

The product refers to electrics knowledge. Please don't disassemble it by yourself.
If any quality problem happens, please contact the factory for warranty details.
NOTE: Actual performance may differ as a result of end-user environment and application. All values are without notice.