FY Lighting
Since 2007

FY LIGHTING

Explosion Proof LED Light

CERTIFIED | 844 CERTIFIED | IP66 RATING | IK10 RATING | RoHS COMPILANT | CIII | CID2 | CIID2

Certification Level

Class I, Division 1, Groups B, C and D
Class I, Division 2, Groups A, B, C and D
Class II Division 2, Groups F, G
Class III



FY Lighting
Since 2007

FY LIGHTING

Explosion Proof LED Light

IP66 | IK10 | 150 lm/W | 70,000 Hours Lifetime



Reliable Lighting for Hazardous Location

Since 2007, FY Lighting has specialized in safe, durable, and energy-efficient lighting solutions for industrial and hazardous areas.
Our Explosion Proof LED Lights are built to perform in extreme environments ensuring protection, stability, and long-term reliability where safety matters most.

Certified Performance

Class I, Division 1 & 2 | Class II, Division 2 | Class III | IP66 | IK10 | 150 lm/W | 100,000 Hours Lifetime

Contact Us

FY Lighting Co., Ltd.



FY DIFFERENCE

Advanced LED & Optical Design
High-efficiency LEDs deliver bright, uniform, and low-glare illumination — exactly where it's needed, improving both visibility and safety.

Ready for Extreme Conditions
Certified for hazardous and industrial environments, our lights are backed by a 5-year warranty and engineered to perform reliably under the toughest conditions.

Durable, Low-Maintenance Design
Each fixture is fully sealed and engineered to minimize maintenance throughout its lifetime.
Easy to install and retrofit, our luminaires ensure long-term reliability with minimal downtime.

Engineered Power Supply
Long-life, fully potted drivers provide superior thermal management and protection against dust, moisture, and vibration ensuring consistent performance in harsh environments.

ALT (Accelerated Life Test): Over 5 years of continuous 24/7 operation.

MTBF (Mean Time Between Failures): Exceeding 150,000 hours, with an annual failure rate under 0.3%.

Driver: Fully sealed and thermally protected for maximum reliability.

FYS / FYD SERIES

CERTIFIED | 844 CERTIFIED | IP66 RATING | IK10 RATING | CE | RoHS COMPLIANT

CIII | CID2 | CIID2





Product Specification

Model: FYS Series
Power: 20W / 40W / 50W / 60W / 70W / 80W
Warranty: 5 Year
Lumens: 3000-12000 lm
Efficacy: Up to 150 lm/W
Rating: IP 66, IK10
Certification: Class I Division 2, Groups A, B, C and D;
Class II Division 2, Groups F, G
Class III
Operating Temp: -40°F – +149°F (-40°C – +65°C)
Voltage: 100–277VAC / 200–480VAC
CRI: 70 and 80
Rated Life: L70 >100,000 hours
Lens: Tempered Glass
Beam Angle: 25° / 60° / 90° / 110°
Mounting Option: Pendant / Yoke / Ceiling / Stanchion / Wall / Pole
Emergency: For 90 minutes

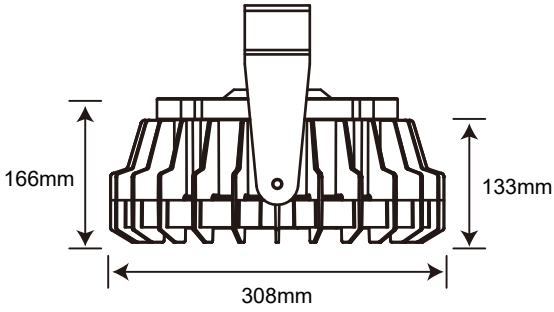

Product Specification

Model: FYD Series
Power: 100W / 120W / 120W / 150W / 160W / 180W / 200W
Warranty: 5 Year
Lumens: 15000-30000 lm
Efficacy: Up to 150 lm/W
Rating: IP 66, IK10
Certification: Class I Division 2, Groups A, B, C and D;
Class II Division 2, Groups F, G
Class III
Operating Temp: -40°F – +149°F (-40°C – +65°C)
Voltage: 100–277VAC / 200–480VAC
CRI: 70 and 80
Rated Life: L70 >100,000 hours
Lens: Tempered Glass
Beam Angle: 25° / 60° / 90° / 110°
Mounting Option: Pendant / Yoke / Ceiling / Stanchion / Wall / Pole
Emergency: For 90 minutes

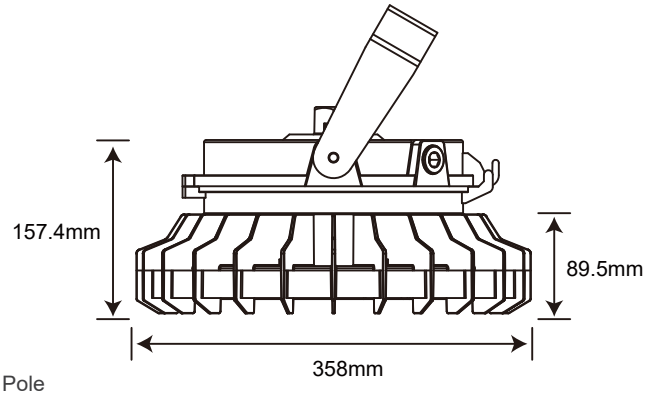

FFS / FFD SERIES

CERTIFIED | 844 CERTIFIED | IP66 RATING | IK10 RATING | CE | RoHS COMPILANT

CIII | CID2 | CIID2





Product Specification

Model: FFS Series
Power: 20W / 40W / 50W / 60W / 70W / 80W
Warranty: 5 Year
Lumens: 3000-12000 lm
Efficacy: Up to 150 lm/W
Rating: IP 66, IK10
Certification: Class I Division 2, Groups A, B, C and D; Class II Division 2, Groups F, G , Class III
Operating Temp: -40°F – +149°F (-40°C – +65°C)
Voltage: 100–277VAC / 200–480VAC
CRI: 70 and 80
Rated Life: L70 >100,000 hours
Lens: Tempered Glass, PC
Beam Angle: 25° / 60° / 90° / 110°
Mounting Option: Pendant / Yoke / Ceiling / Stanchion / Wall / Pole
Emergency: For 90 minutes

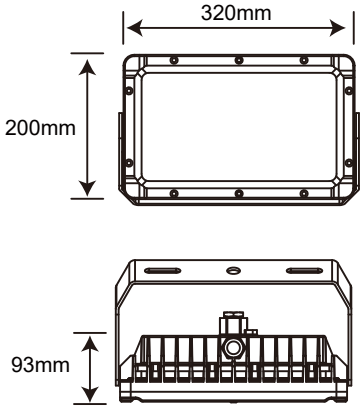

Product Specification

Model: FFD Series
Power: 100W / 120W / 130W / 150W / 160W / 180W / 200W
Warranty: 5 Year
Lumens: 15000-30000 lm
Efficacy: Up to 150 lm/W
Rating: IP 66, IK10
Certification: Class I Division 2, Groups A, B, C and D; Class II Division 2, Groups F, G , Class III
Operating Temp: -40°F – +149°F (-40°C – +65°C)
Voltage: 100–277VAC / 200–480VAC
CRI: 70 and 80
Rated Life: L70 >100,000 hours
Lens: Tempered Glass, PC
Beam Angle: 25° / 60° / 90° / 110°
Mounting Option: Pendant / Yoke / Ceiling / Stanchion / Wall / Pole
Emergency: For 90 minutes

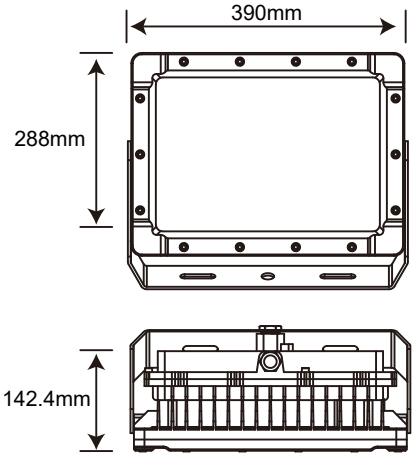

FFD High-Temp Edition

Heat resistant up to 90°C

UL CERTIFIED | UL 844 CERTIFIED | IP66 RATING | IK10 RATING | CE | RoHS COMPLIANT | CIII | CID2 | CIID2





Product Specification

Model: FFD High-Temp Edition
Power: 100W / 120W / 130W / 150W / 160W / 180W / 200W
Warranty: 5 Year
Lumens: 15000-30000 lm
Efficacy: Up to 150 lm/W
Rating: IP 66, IK10
Certification: Class I Division 2, Groups A, B, C and D; Class II Division 2, Groups F, G , Class III
Operating Temp: -40°F – +149°F (-40°C – +65°C)
Voltage: 100–277VAC / 200–480VAC
CRI: 70 and 80
Rated Life: L70 >100,000 hours
Lens: Tempered Glass, PC
Beam Angle: 25° / 60° / 90° / 110°
Mounting Option: Pendant / Yoke / Ceiling / Stanchion / Wall / Pole

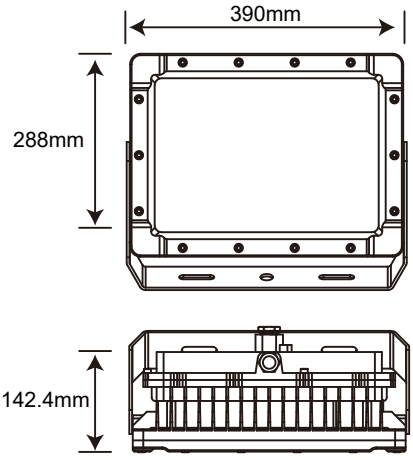

Key Feature

- **High temperature resistant up to 90°C**
- **IP66 & IK10 rated for harsh environments**
- **Explosion-proof structure, suitable for hazardous location**
- **Optional 100–200W power range**
- **Long lifespan >100,000 hours**
- **Multiple mounting options for flexible installation**

