Shenzhen Solway New Energy Ltd

ALL IN ONE SOLAR STREET LIGHT

SPECIFICATION

(BATMAN SERIES)

Product Name	Batman series
Model Number	BMS-20-5Y
Valid From	2019/11/13

SOLWAY

Parameters

Model No.	BMS-20-5Y
Light Output	20W
LiFePO4 Power Battery	116WH
Light Efficiency	2000 lm
LED Chip	NICHIA
Warranty	5 Years
CCT	5000K-6500K
Beam Angle	157X60 degree
Lamp Angle	0/30 degree
Backup Time	3 nights
Dim Mode	First 3 hours full brightness, last 9 hours in dimmable mode(60% brightness with people, 30% brightness without people)
Working Temperature	- 10℃ to 70℃
Charging Time	9 - 11 hours
Required Pole Size:	60 mm(top end)
Installation Height	4 - 6m
Recommended Mounting Distance	15 m

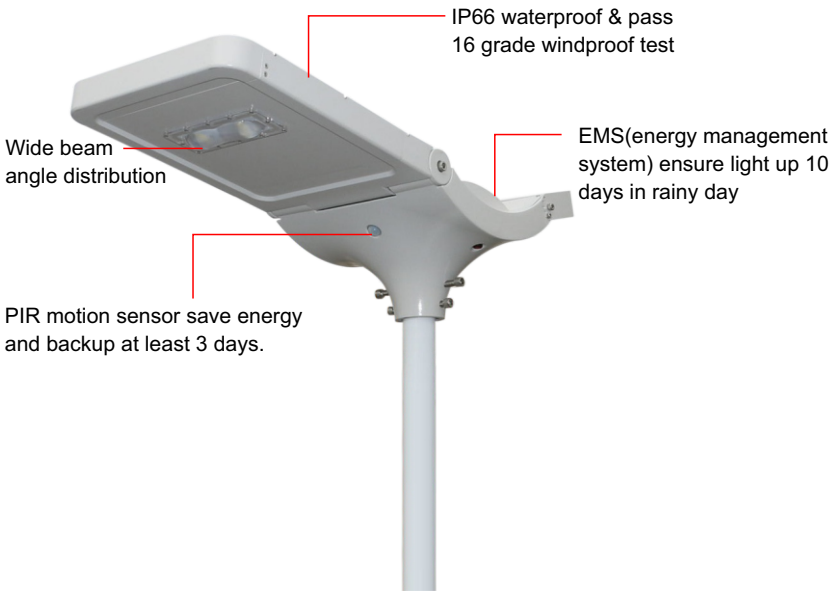

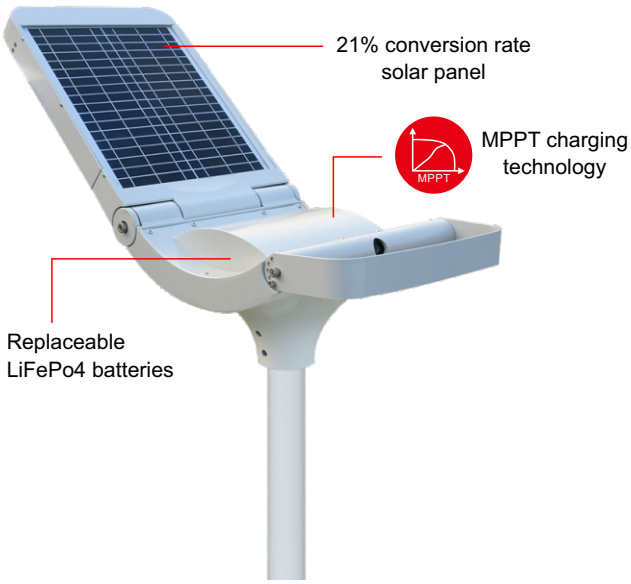

Product size & Packing info

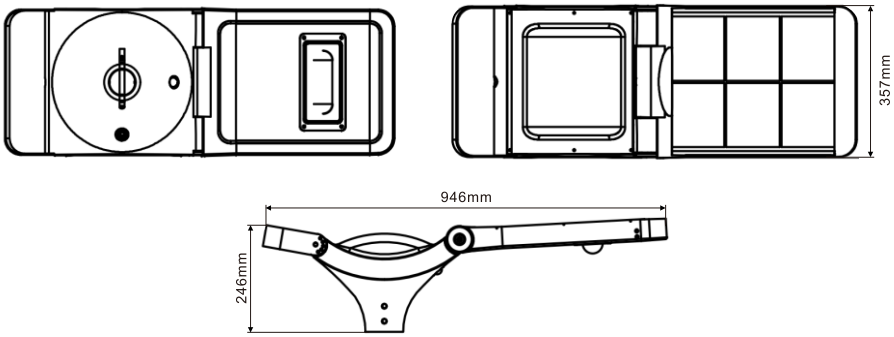

Wattage		Packing	Carton Size	N.W.(kgs)	G.W.(kgs)	20ft container	40ft container
20W	Lamp Body	1pcs/ctn	670*480*180mm	8.5	10	186 sets	384 sets
	Arm & Batteries pack	1pcs/ctn	510*440*380mm	7.5	10.5		
				16	20.5		

Applications
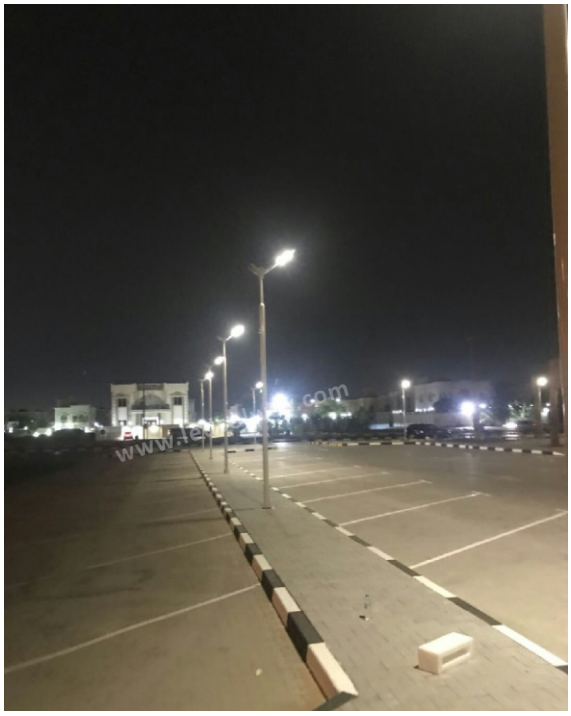
Widely used in the road, street, and factory, park road, rural, mountainous area and the remote area lighting project, courtyard, schools, square and other need to place for outdoor lighting.