Hazardous Location LED Luminaire

Date:..... Location: .....

Product:..... Project:.....

Quantity:..... Catalog# .....



FEATURES

- Three mounting options available: Ceiling, Pole, Wall.
- Copper-free aluminum housing, delivering excellent corrosion esistance and superior heat dissipation.
- Chip-on-board (COB) LED with a correlated color temperature (CCT) of 5000K and CRI above 70.
- Diffuser constructed from tempered glass for exceptional impact and thermal shock resistance. Available in clear or frosted lens options.
- Metal guard included for enhanced protection.

SUITABLE APPLICATIONS

- Power Plants
- Heavy Industrials Storage Facility
- Paper mills
- Wastewater Treatment Plants
- Loading Docks Platforms
- Offshore Environments
- Chemical Processing Facility
- Petrochemical Processing Facility
- Metallurgical industry
- Coal Mine
- Food and Alcohol industry

CONSTRUCTION:

The O Series LED luminaire is an ideal solution for marine and hazardous locations.

Suitable for environments exposed to moisture, dirt, dust, corrosion and vibration, as well as areas subject to wind, water, snow and high ambient temperatures.

Featuring a highly reliable waterproof and dustproof design with no internal cleaning or maintenance required.

Its compact, space-saving structure makes it perfect for various spotlight applications, including mines, breweries, walkways and more.

Compliance:

Class I Division 2, Group A, B, C, D (T6/T5/T4)
Class II Division 1, Group E, F, G (T80°C/T95°C/T130°C)
Class II Division 2, Group F, G (T80°C/T95°C/T130°C)
Class III/Class I, Zone 2, Group IIC (T6/T5/T4)
Zone 20, 21, 22
UL 1598 (Wet Locations)/ UL 1598A (Marine Outside Type)
UL 8750 (LED Safety Standard)/UL 924 (Emergency Lighting Standard)
ABS (American Bureau of Shipping)/ CSA (Certificate: 80070037)
IP66 (Ingress Protection Rating)/ IK08 (Impact Protection Rating)

WARRANTY:

5-Year Standard Warranty

INSTALLATION&MOUNTING:

Ceiling, Pole, Wall

PERFORMANCE

Model NO	Power Factor	Rated Power	Voltage/Current Input		Light Efficiency	Kelvin Options
			120V	277V		
Ex-27W-OY50CM1	0.95	27W	0.22A	0.09A	100LM/W	5000K

Technical Parameter

Specification/Model	Ex-27W-OY50CM1
Dimming	0-10V dimming optional
Rated Power	27W
Lumens output	2700LM
Efficiency	100LM/W
CRI	>70
CCT	5000K
Input voltage	120-277AC
Light distribution type	97°
Working temperature	-40°C to +50°C
Housing Material	Copper-free aluminum
Diffuser	Tempered glass
Outlet	Regular 1 meter
Protection	IP66/IK08
Mounting	Ceiling, Pole, Pendant, Wall
Cable Entry	Four side-wall cable entries accept M25/M20/NPT/1/2"/3/4" IP-rated cable glands or plugs.
Equivalent	50-100WMH/HPS

PRODUCT ORDERING GUIDE

Ex-27W-OY50CM1
1 2 34 5 6 7

EX - 27W - O Y 50 C M1

☑	EX	Explosion-proof Product
☑	27W	Wattage
☑	O	Product Series 4
☑	Y	Dimmable
☑	50	Color Temperature 5000K
☑	C	Long Globe Glass
☑	M1	Ceiling mounting

DISTRIBUTION DIAGRAM

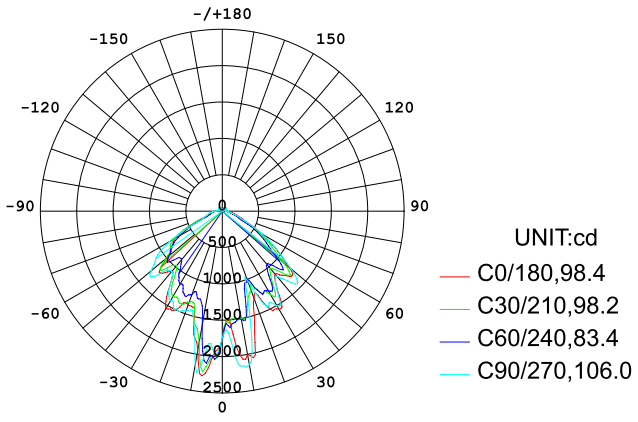

AVERAGE BEAM ANGLE(50%):96.5 DEG

DIMENSION Unit: mm [inch]

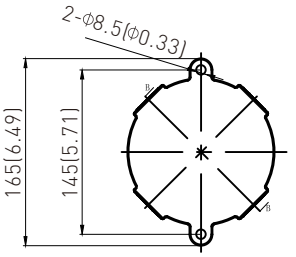

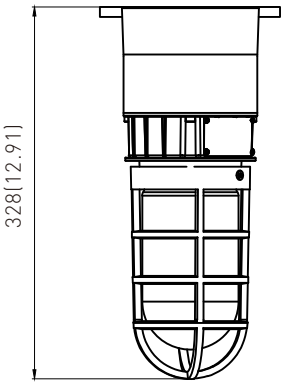

Installation Instructions

Surface ceiling mounted



⚠WARNING

Risk of fire, electric shock or injury.
Disconnect power before installation.

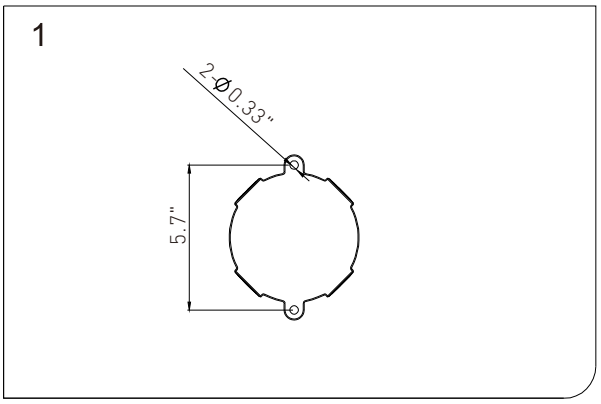

1.Drill two 0.31" holes at the specified spacing for installation.

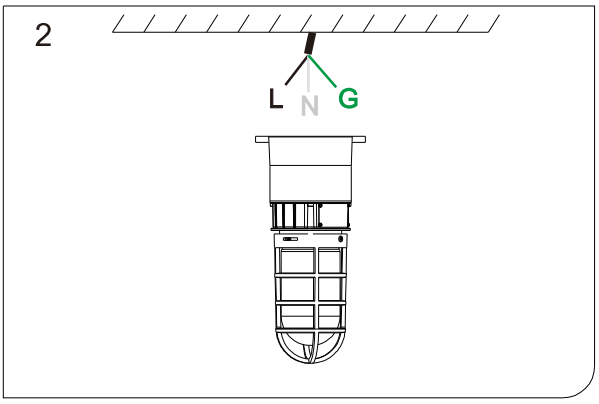

2.Connect AC wiring as follows: Green to ground, White to neutral, Black to live.

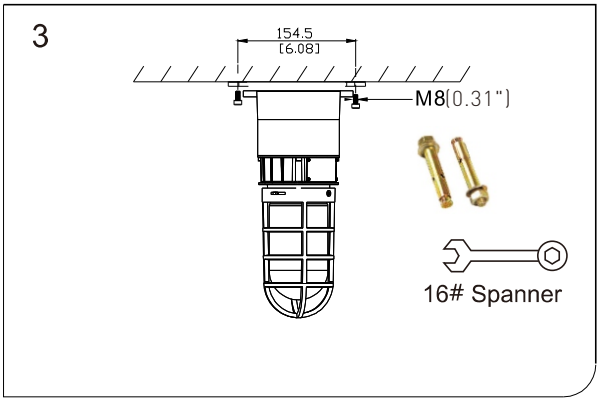

3. Install expansion screws, align luminaire holes, then tighten nuts to secure.

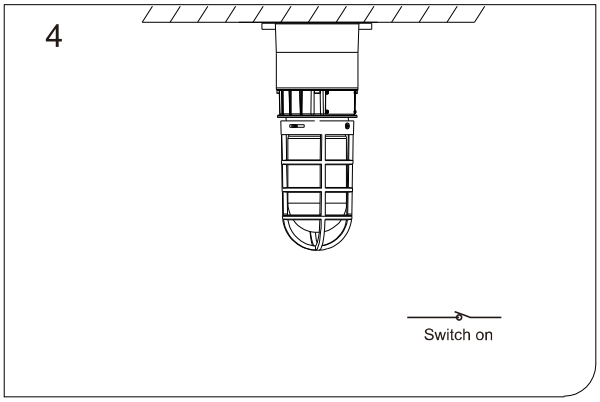

4. Restore power to test luminaire operation.