| PROJECT NAME | | | |
|---|---|---|---|
| TYPE | | DATE | |
| NOTES | | | |

# CL-SSA

## Square Straight Aluminum

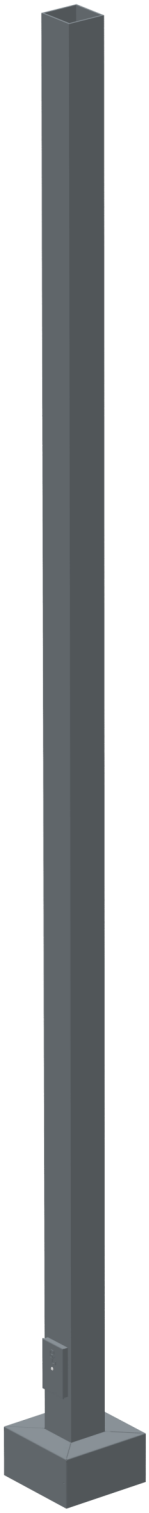

**Pole Shaft**

Constructed of seamless extruded 6063 Aluminum Alloy tube per ASTM B221 requirements. Poles have Ground Lug welded inside behind hand hole. Hand Hole is 3”x5” and has a reinforced frame.

**Base Plate**

4-Bolt Aluminum base flange, 3/4” thick plate for poles up to 20ft High and 1” thick for poles 21ft of height and over.

**Powder Coating**

All poles are sandblast prior to painting, Powder coat is applied to a minimum of 3 millimeters and baked at 400 ºF temperature. CL-SSA comes with (3) three year warranty.

**Anchor Bolts**

Anchor bolt Kit includes 4 L-Shaped Hot Dip Galvanized Bolts, each anchor bolt come with two galvanized nuts and washer per bolt, Anchor bolts meet or exceed a minimum of 36,000 PSI and conform to ASTM F1554 grade 36.

**Base Cover, Hand Hole Cover and Pole Cap**

CL-SSA come with Removable Pole Cap and Aluminum Base Cover Powder Coated to match Pole. Cast Hand Hole Cover are provided with Internal bridge support and are powder coated to match pole.

**Example:** CL-SSA-8-4-.188-9BP-342-D180-BRZ-T3R

Project:

| CAT # | LENGTH | POLE O.D | SIZE | BOLT CIRCLE | ANCHOR BOLT | MOUNTING | FINISH | ACCESSORIES |
|---|---|---|---|---|---|---|---|---|
| Square Straight Aluminum **(CL-SSA)** | 8’<br>10’<br>12’<br>14’<br>16’<br>18’<br>20’<br>25’<br>30’ | 4”SQ**(4S)**<br>5”SQ **(5S)**<br>6”SQ **(6S)** | .125 **(.125)**<br>.188” **(.188)**<br>1/4” **(.250)** | 8”3/16 - 10”3/16 Bolt Circle (10’-20’) **(9BP)**<br>10” - 12” Bolt Circle (21’ Over) **(12BP)** | 3/4”x24” **(342)**<br>1”x36” **(136)** | SIDE MOUNT<br>Single **(SGL)**<br>Double **(D-180)**<br>Double **(D-90)**<br>Triple **(T-90)**<br>Quad **(QD)** | Bronze **(BRZ)**<br>White **(WHT)**<br>Silver **(SVR)**<br>Green **(GRN)**<br>Black **(BLK)**<br>Graphite **(GPH)**<br>Custom **(CST)**<br>MARINE GRADE **(MG)** | **Tenon**<br>2” 3/8 RND **(T2R)**<br>3’RND **(T3R)**<br>3” 1/2RND **(T312R**<br>4”RND **(T4R)**<br>4”1/2RND **(T412R)**<br>3” 1/2SQ **(T312S)**<br>4”1/2SQ **(T412S)**<br>5”1/2SQ **(T412S)**<br>Round Base Cover **(RBC)**<br>GFI Provision ONLY **(GFIP)**<br>GFI KIT **(GFIK)** |

**All products are proudly manufactured and/or assembled in the USA**

# CL-SSA

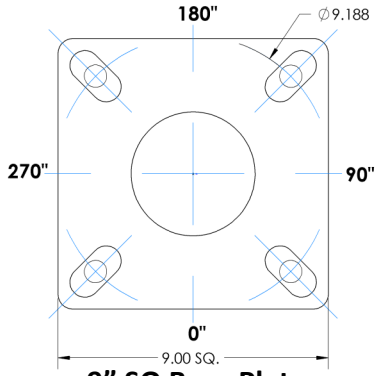


**9” SQ Base Plate**

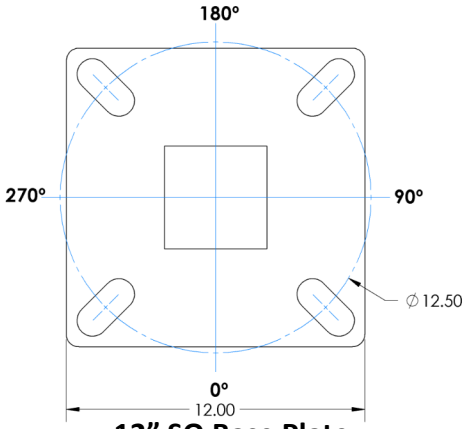


**12” SQ Base Plate**

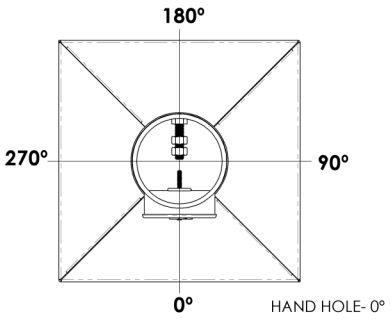


| POLE EPA | | | | | | | | | | |
|---|---|---|---|---|---|---|---|---|---|---|
| Maximum EPA (ft) allowance | | | | | | | | | | |
| POLE | POLE DIA | SIZE | BASE PLATE | BOLT CIRCLE | BOLTS | 90 Mph | 100 Mph | 110Mph | 120 Mph | 130 Mph |
| 8’ | 4” SQ. | .125 | 3/4” X 9” SQ | 9”-3/16 | 3/4” X 24” | 23.2 | 18.4 | 17.2 | 14.2 | 11.8 |
| 10’ | 4” SQ. | .125 | 3/4” X 9” SQ | 9”-3/16 | 3/4” X 24” | 17.6 | 13.8 | 12.8 | 10.4 | 8.6 |
| 10’ | 4” SQ. | .125 | 3/4” X 9” SQ | 9”-3/16 | 3/4” X 24” | 26.2 | 20.8 | 19.4 | 16.0 | 13.2 |
| 12’ | 4” SQ. | .125 | 3/4” X 9” SQ | 9”-3/16 | 3/4” X 24” | 13.8 | 10.6 | 9.8 | 7.8 | 6.2 |
| 12’ | 4” SQ. | .188 | 3/4” X 9” SQ | 9”-3/16 | 3/4” X 24” | 21.0 | 16.4 | 15.2 | 12.4 | 10.2 |
| 12’ | 5” SQ. | .188 | 1” X 12” SQ | 12”-1/2 | 1” X 36” | 35.0 | 27.6 | 25.6 | 20.8 | 17.2 |
| 14 | 4” SQ. | .125 | 3/4” X 9” SQ | 9”-3/16 | 3/4” X 24” | 10.8 | 8.2 | 7.6 | 5.8 | 4.6 |
| 14 | 4” SQ. | .188 | 3/4” X 9” SQ | 9”-3/16 | 3/4” X 24” | 17.0 | 13.2 | 12.0 | 9.6 | 7.8 |
| 14 | 5” SQ. | .188 | 1” X 12” SQ | 12”-1/2 | 1” X 36” | 28.6 | 22.4 | 20.6 | 16.6 | 13.6 |
| 16 | 4” SQ. | .125 | 3/4” X 9” SQ | 9”-3/16 | 3/4” X 24” | 8.8 | 6.4 | 5.8 | 4.4 | 3.2 |
| 16 | 4” SQ. | .188 | 3/4” X 9” SQ | 9”-3/16 | 3/4” X 24” | 13.8 | 10.6 | 9.6 | 7.6 | 6.0 |
| 16 | 5” SQ. | .188 | 1” X 12” SQ | 12”-1/2 | 1” X 36” | 23.8 | 18.4 | 16.8 | 13.4 | 10.8 |
| 18 | 4” SQ. | .125 | 3/4” X 9” SQ | 9”-3/16 | 3/4” X 24” | 6.8 | 4.8 | 4.2 | 3.0 | 2.0 |
| 18 | 4” SQ. | .188 | 3/4” X 9” SQ | 9”-3/16 | 3/4” X 24” | 11.2 | 8.4 | 7.6 | 5.8 | 4.4 |
| 18 | 5” SQ. | .188 | 1” X 12” SQ | 12”-1/2 | 1” X 36” | 19.4 | 14.8 | 13.4 | 10.4 | 8.2 |
| 20 | 4” SQ. | .125 | 3/4” X 9” SQ | 9”-3/16 | 3/4” X 24” | 5.0 | 3.4 | 2.8 | 1.8 | - |
| 20 | 4” SQ. | .188 | 3/4” X 9” SQ | 9”-3/16 | 3/4” X 24” | 9.0 | 6.6 | 5.8 | 4.2 | 3.0 |
| 20 | 5” SQ. | .188 | 1” X 12” SQ | 12”-1/2 | 1” X 36” | 15.8 | 11.8 | 10.6 | 8.0 | 6.0 |
| 20 | 6” SQ. | .188 | 1” X 12” SQ | 12”-1/2 | 1” X 36” | 24.8 | 18.8 | 17.0 | 13.2 | 10.2 |
| 25 | 5” SQ. | .188 | 1” X 12” SQ | 12”-1/2 | 1” X 36” | 9.4 | 6.2 | 5.4 | 3.4 | 1.8 |
| 25 | 6” SQ. | .188 | 1” X 12” SQ | 12”-1/2 | 1” X 36” | 15.4 | 10.8 | 9.4 | 6.6 | 4.2 |
| 30 | 6” SQ. | .188 | 1” X 12” SQ | 12”-1/2 | 1” X 36” | 8.8 | 5.0 | 4.0 | 1.6 | - |