Cranville Decorative Pendant - Made in USA - Delaware

LL-DE-CRAN

Cranville Decorative Pendant

The LITELUME™ Cranville (LL-DE-CRAN) is a high performance premium specification grade LED decorative pendant fixture built with cast & spun aluminum made in the USA with the highest quality standards.



Shown with D1 Shade and Solid Midsection
EPA: 1.4 Weight: 29 lbs (Max.)

10 YEAR WARRANTY · ETL LISTED · IDA DARK SKY APPROVED · BUILD AMERICA BUY AMERICA · MADE IN USA · Buy American Act COMPLIANT · IP66 · DIMMABLE

PERFORMANCE DATA	
Lumen Output	1203 - 21600 lm
Lumens Per Watt (typical)	120 - 140 lm/W
CCT	3000K 4000K 5000K 2700K, Amber, LPS (1800K) Offered for Some Wattages - Consult Factory
Lifespan	100,000 hrs

RATINGS & CERTIFICATES

ETL Listed to UL 1598 Standard
Wet location • Dark Sky • IP66

APPLICATIONS

Municipality • Pathway • Perimeter
Pedestrian • Walkway

FIXTURE INFORMATION

Size	Housing	Finish	Mounting	Color	
10W - 155W	Cast Aluminum Upper Dome Spun Aluminum Lower Shade	Durable Polyester Powder Coat Finish Over a Chromate Conversion Coating. Custom Finishes Available, Including Patinas and All RAL Colors.	Pendant Pole Mount Wall Mount	Black Powder Coat (BK) White Powder Coat (WH) Dark Bronze Powder Coat (DBZ) Dark Green Powder Coat (DGR) Gray Powder Coat (GY) Custom (CUS)	
Voltage	**Dimming**	**Electrical**	**Power Factor**	**CRI**	**Warranty**
120 - 277V 480V	0-10V	Standard Surge Protection Included (6kV Line-Line; 10k-V Line-Earth)	.90	70	10 Year Limited

©Lite Lume Corporation 2018

LITELUME™ seeks to deliver the most advanced and efficient LED technology. Due to technology progression, specifications may change. We reserve the right to update product specifications without notice. Contact LITELUME™ for the most up-to-date data.

Cranville Decorative Pendant - Made in USA - Delaware



PERFORMANCE DATA SPECIFICATIONS

Lumen Output for Cranville

Wattage (Lumen Package)		10W (1L)	15W (2L)	20W (3L)	30W (4L)	40W (5L)	50W (7L)	60W (8L)	70W (9L)	80W (11L)	90W (12L)	105W (14L)	120W (16L)	135W (18L)	155W (22L)
Size (Dia.)		6"	6"	6"	6"	6"	8"	8"	12"	12"	12"	13"	13"	13"	13"
Input Watts		10.2	14.6	20.4	30.6	40.8	51.0	56.6	67.9	77.6	87.3	101.9	116.5	131.0	152.9
Optic	CCT	Delivered Lumens													
1 = Type I Clear PC Lens	3K	NOT AVAILABLE							8,156	9,319	10,485	12,260	14,012	15,763	18,390
	4K								8,486	9,698	10,910	12,757	14,580	16,403	19,136
	5K								8,817	10,075	11,335	13,255	15,149	17,041	19,882
	BUG Rating								B3-U0-G2	B3-U0-G2	B3-U0-G2	B3-U0-G3	B3-U0-G3	B4-U0-G3	BX-U0-GX
2 = Type II Clear PC Lens	3K	1,314	1,877	2,628	3,941	5,110	6,595	7,328	8,819	10,078	11,338	13,259	15,152	17,047	19,888
	4K	1,367	1,953	2,735	4,102	5,086	6,863	7,625	9,176	10,487	11,798	13,796	15,767	17,739	20,694
	5K	1,420	2,029	2,841	4,261	5,524	7,130	7,922	9,533	10,896	12,257	14,333	16,380	18,428	21,500
	BUG Rating	B1-U0-G0	B1-U0-G0	B1-U0-G1	B1-U0-G1	B1-U0-G1	B2-U0-G1	B2-U0-G1	B2-U0-G2	B2-U0-G2	B2-U0-G2	B2-U0-G2	B3-U0-G2	B3-U0-G2	B3-U0-G3
3 = Type III Clear PC Lens	3K	1,319	1,884	2,638	3,957	5,130	6,621	7,357	8,854	10,119	11,383	13,312	15,213	17,115	19,968
	4K	1,372	1,961	2,746	4,118	5,106	6,891	7,656	9,213	10,530	11,846	13,852	15,831	17,810	20,777
	5K	1,425	2,037	2,853	4,278	5,546	7,159	7,954	9,571	10,939	12,307	14,391	16,446	18,502	21,586
	BUG Rating	B1-U0-G1	B1-U0-G1	B1-U0-G1	B1-U0-G1	B2-U0-G2	B2-U0-G2	B2-U0-G2	B2-U0-G2	B3-U0-G3	B3-U0-G3	B3-U0-G3	B3-U0-G3	B3-U0-G3	B3-U0-G3
4 = Type IV Clear PC Lens	3K	1,203	1,719	2,407	3,611	4,659	6,042	6,714	8,079	9,233	10,388	12,147	13,882	15,617	18,219
	4K	1,252	1,790	2,505	3,757	4,848	6,288	6,986	8,407	9,608	10,809	12,640	14,445	16,251	18,959
	5K	1,301	1,859	2,603	3,904	5,037	6,531	7,258	8,734	9,982	11,229	13,132	15,007	16,883	19,697
	BUG Rating	B0-U0-G1	B1-U0-G1	B1-U0-G1	B1-U0-G2	B1-U0-G2	B1-U0-G2	B2-U0-G2	B3-U0-G3	B2-U0-G3	B2-U0-G3	B2-U0-G3	B2-U0-G3	B3-U0-G3	B3-U0-G4

Please refer to the fixture's IES file for detailed information. Subject to change.

Continued on Next Page

LITELUME™ seeks to deliver the most advanced and efficient LED technology. Due to technology progression, specifications may change. We reserve the right to update product specifications without notice. Contact LITELUME™ for the most up-to-date data.

Cranville Decorative Pendant - Made in USA - Delaware

PERFORMANCE DATA SPECIFICATIONS

Lumen Output for Cranville

Wattage (Lumen Package)		10W (1L)	15W (2L)	20W (3L)	30W (4L)	40W (5L)	50W (7L)	60W (8L)	70W (9L)	80W (11L)	90W (12L)	105W (14L)	120W (16L)	135W (18L)	155W (22L)
Size (Dia.)		6"	6"	6"	6"	6"	8"	8"	12"	12"	12"	13"	13"	13"	13"
Input Watts		10.2	14.6	20.4	30.6	40.8	51.0	56.6	67.9	77.6	87.3	101.9	116.5	131.0	152.9
Optic	CCT	Delivered Lumens													
F = Type V Clear PC Lens	3K	1,320	1,886	2,640	3,960	5,134	6,626	7,362	8,860	10,125	11,391	13,321	15,223	17,126	19,981
	4K	1,373	1,962	2,748	4,121	5,109	6,895	7,661	9,219	10,536	11,853	12,861	15,841	17,822	20,791
	5K	1,426	2,038	2,854	4,281	5,550	7,163	7,959	9,578	10,946	12,315	14,400	16,457	18,514	21,600
	BUG Rating	B1-U0-G0	B1-U0-G0	B2-U0-G1	B2-U0-G1	B3-U0-G1	B3-U0-G1	B3-U0-G1	B3-U0-G2	B3-U0-G2	B3-U0-G2	B4-U0-G2	B4-U0-G2	B4-U0-G2	B4-U0-G3
F = Type V with LumaLens	3K	NOT AVAILABLE										8,077	9,231	10,385	12,115
	4K											8,404	9,604	10,805	12,606
	5K											8,732	9,978	11,225	13,097
	BUG Rating											B3-U3-G2	B3-U3-G3	B3-U3-G3	B3-U3-G3

Please refer to the fixture's IES file for detailed information. Subject to change.

STYLES

D1 Shade, 4W Midsection	D1 Shade, 16W Midsection	D1 Shade, Louvered Midsection	D1 Shade, Solid Midsection
			
D2 Shade, 4W Midsection	**D2 Shade, 16W Midsection**	**D2 Shade, Louvered Midsection**	**D2 Shade, Solid Midsection**
			

LITELUME™ seeks to deliver the most advanced and efficient LED technology. Due to technology progression, specifications may change. We reserve the right to update product specifications without notice. Contact LITELUME™ for the most up-to-date data.

Cranville Decorative Pendant - Made in USA - Delaware

STYLES

D3 Shade, 4W Midsection	D3 Shade, 16W Midsection	D3 Shade, Louvered Midsection	D3 Shade, Solid Midsection
			
D4 Shade, 4W Midsection	**D4 Shade, 16W Midsection**	**D4 Shade, Louvered Midsection**	**D4 Shade, Solid Midsection**
			
D5 Shade, 4W Midsection	**D5 Shade, 16W Midsection**	**D5 Shade, Louvered Midsection**	**D5 Shade, Solid Midsection**
			

Cast Rings (Shown w/ D1 Shade)	Pole Mount (SMPR/S)	Side Mount, Wall (SMW)
		

LITELUME™ seeks to deliver the most advanced and efficient LED technology. Due to technology progression, specifications may change. We reserve the right to update product specifications without notice. Contact LITELUME™ for the most up-to-date data.

Cranville Decorative Pendant - Made in USA - Delaware

DIMENSIONS

D1 Shade

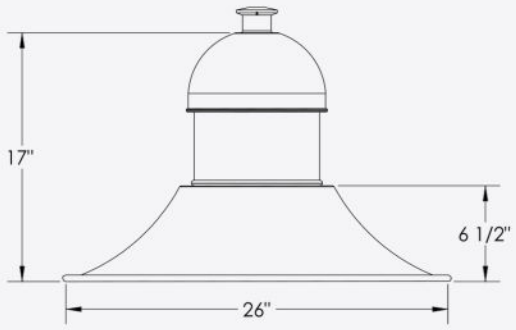

D2 Shade

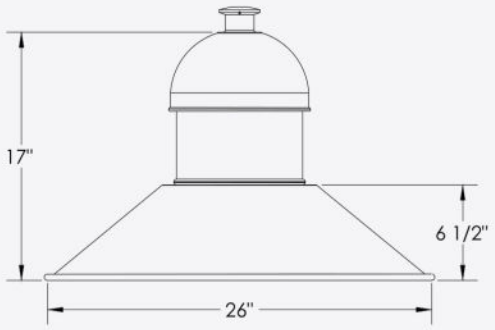

D3 Shade

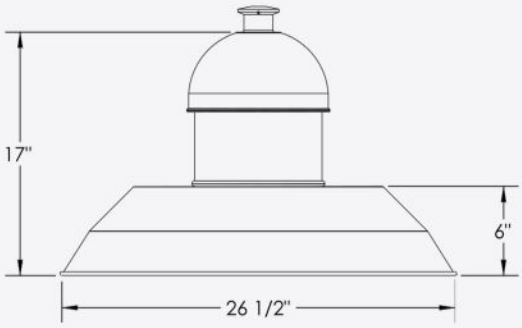

D4 Shade

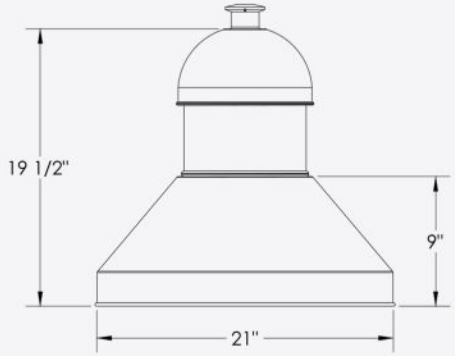

D5 Shade

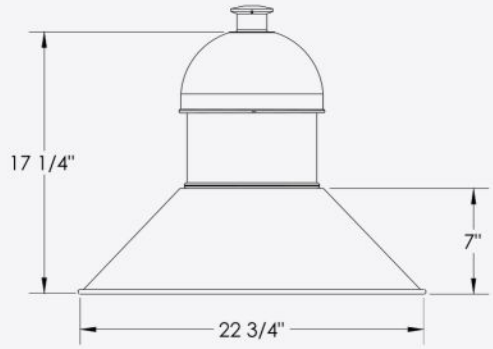

LITELUME™ seeks to deliver the most advanced and efficient LED technology. Due to technology progression, specifications may change. We reserve the right to update product specifications without notice. Contact LITELUME™ for the most up-to-date data.

Cranville Decorative Pendant - Made in USA - Delaware

DIMENSIONS

Pole Mount Dimensions

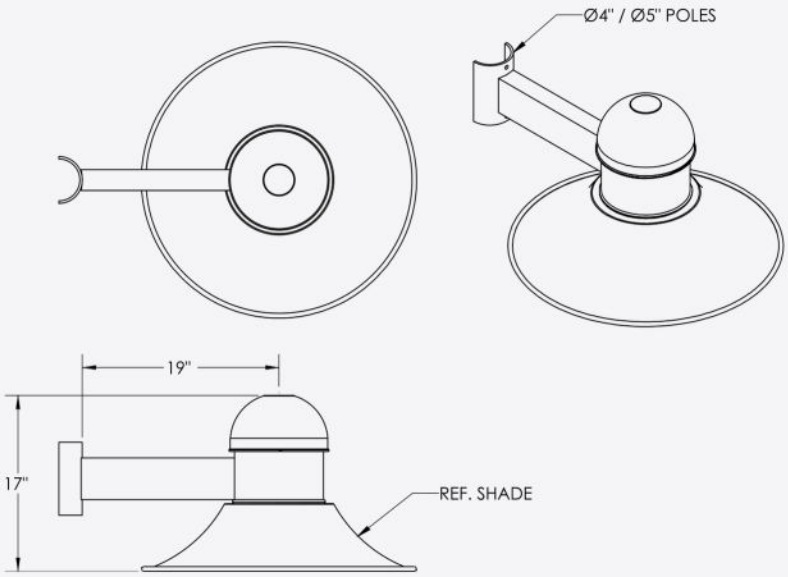

Wall Mount Dimensions

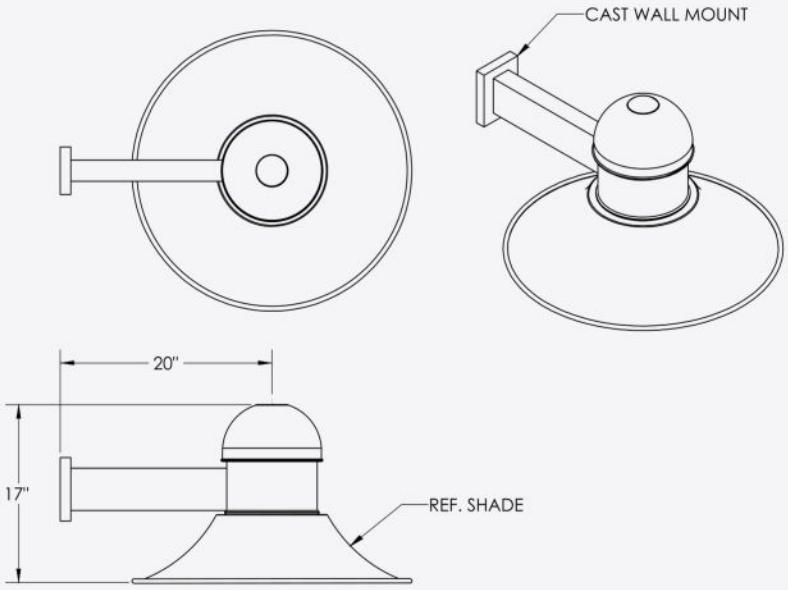

LITELUME™ seeks to deliver the most advanced and efficient LED technology. Due to technology progression, specifications may change. We reserve the right to update product specifications without notice. Contact LITELUME™ for the most up-to-date data.

Cranville Decorative Pendant - Made in USA - Delaware

PROJECT NAME	
CATALOG #	
JOB TYPE	
PREPARED BY	
NOTES	

ORDERING GUIDE

Brand	Location	Fixture Type
LL LITELUME	**DE** Delaware	**CRAN** Cranville Pendant

Shades	Lumen Package		CCT	Voltage	Distribution
D1 Flared **D2** Shallow Tapered **D3** Beveled **D4** Deep Tapered **D5** Narrow Tapered	**1L** 1000 Lumens **2L** 2000 Lumens **3L** 3000 Lumens **4L** 4000 Lumens **5L** 5000 Lumens **7L** 7000 Lumens **8L** 8000 Lumens	**9L** 9000 Lumens **11L** 11000 Lumens **12L** 12000 Lumens **14L** 14000 Lumens **16L** 16000 Lumens **18L** 18000 Lumens **22L** 22000 Lumens	**30** 3000K **40** 4000K **50** 5000K	**UNV** 120-277V **480** 480V	**T1** Type I * **T2** Type 2 **T3** Type 3 **T4** Type 4 **T5** Type 5 * 9L and Above Only

Midsection & Accents	Mounting	Options	Finish
SMS Solid Midsection **4W** 4 Window Midsection **16W** 16 Window Midsection **LM** Louvered Midsection **CR** Cast Rings (4) ** ** Pendant Mount Only	**PEN** 2.5" Round Plumbizer Pendant Mount **SMPR** Round Pole Side Mount **SMPS** Square Pole Side Mount **SMW** Wall Side Mount	**BLANK** None **PC** Button Photocell **HSS** House Side Shield	**BK** Black Powder Coat **WH** White Powder Coat **DBZ** Dark Bronze Powder Coat **DGR** Dark Green Powder Coat **GY** Gray Powder Coat **CUS** Custom *

©Lite Lume Corporation 2018

LITELUME™ seeks to deliver the most advanced and efficient LED technology. Due to technology progression, specifications may change. We reserve the right to update product specifications without notice. Contact LITELUME™ for the most up-to-date data.