ECO- FX- 95W Solar Street Light





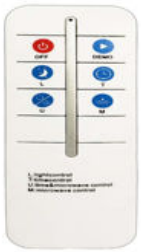

Description&Feature

This integrated solar street light is high quality solution, with LifePO4 12.8V battery, 18V Mono solar panel, PWM or MPPT Solar controller. The duration time is 3-5 raining days. And it is with a adjustable joint, can be installed on top of pole or arm of pole. Available a remote controller. Widely used for governments projects.

Working model: Light with radar sensor, dusk to dawn. During night time, the light will be 100% brightness when there is any movement, but it will be only 30% brightness when there is no any movement.

Light Distribution Curve

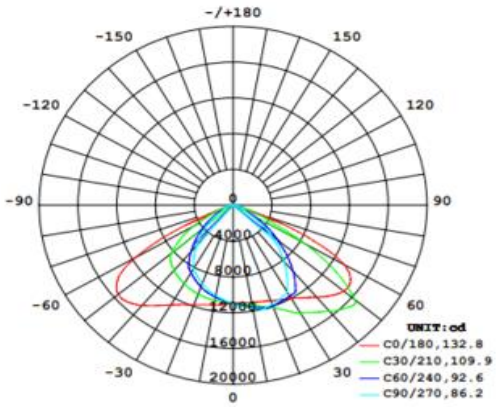

Specification

Order Model	ECO-FX-95WH
Dimension(mm)	L1215*W438*H108mm
Materials	Aluminum alloy. IP65 Waterproof
Power	95W
LED Chips brand	Bridgelux SMD5050 144pcs
Lumens	10000lm
Color temperature	3000K/4000K-4500K/6000K-6500K
CRI	>80
Beam angle	70*140°
LifePO4 battery	12.8V 45AH
Solar Panel	Mono solar panel 18V 100W
Install Pole diameter	60-65mm
Mounting height	8-9M
Installation Distance	25-30M
Solar charging time	6hours by bright sunling
Duration	**5-7raining days**
Motion sensor	Yes (Microwave Sensor)
Sensor distance	12-20m
Remote controller	Yes (1pcs remote controller per order)
Working temperature	-25°C～+65°C
Storage temperature	-30°C～+70°C
Standard	CE LVD EMC RoHs
Warranty	3Years

4G Specifications of HD Audio Wireless Dome Camera

Pictures





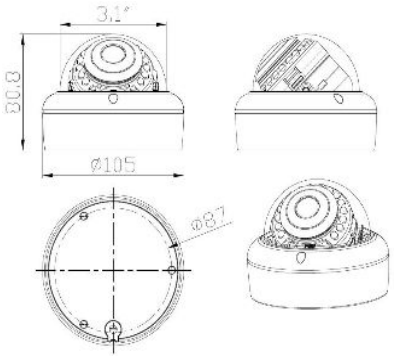

Key Features

1. Maximum support 1920*1080 output
2. Recording takes up very small space on the disk, and supports up to 128G
3. Industry-leading connection speed video preview
4. Support audio monitoring
5. Support WIFI hotspot AP and routing dual mode switching
6. Support remote access for smartphones, computers and tablets, support P2P, QR code scanning

Camera	Sensor Type	1/3” CMOS Sensor
	Minimum illuminance	Color 0.5Lux@F1.2
	Yuntai	No
	Lens	3.6mm, horizontal field of view 80.5°
	Day and night conversion mode	IR-cut dual filter automatically switches
	Wide dynamic range	No
	Digital noise reduction	3D digital noise reduction
	Audio	Microphone
Compression standard	Video compression standard	H.264 / MJPEG
	H.265 encoding type	Main Profile
	Compressed output bit rate	32 Kbps~8Mbps
Image	Maximum image size	1920*1080
	Frame rate	1920*1080@15fps
	Image setting	Brightness, contrast, saturation, sharpness, etc. are adjustable through the
	BLC	Support
Internet function	Storage function	32G TF card (maximum support 128G)
	Interface Protocol	No support
	Intelligent alarm	Motion detection, occlusion alarm, network cable break, IP address conflict
	Supporting agreement	TCP/IP,ICMP,HTTP,HTTPS,FTP,DHCP,DNS,DDNS,RTP,RTSP,RTCP,PPPoE,NTP,UPnP,SMTP,SNMP,IGMP,802.1X,IPv6
	General function	Anti-flicker, dual stream, heartbeat, mirror, password protection
	Wireless function	External wireless WIFI module, support 802.11b/g/n wireless mode; free network cable intelligent configuration
Interface	Communication Interface	4G/Wi-Fi(IEEE802.11b)
General specification	Working temperature and humidit	-30 ° C ~ 60 ° C, humidity less than 95% (no condensation)
	Power supply	DC12V 0.42A ±25%
	Power consumption	5W MAX
	Waterproof grade	IP66
	Size（mm）	100MM*85MM
	Wight	500g
	Infrared illumination distance	15m
	Remarks	Mobile client Camhi (please go to Android Market / Apple Market Download)