FFD High-Temp Edition

Heat resistant up to 90°C

UL CERTIFIED | UL 844 CERTIFIED | IP66 RATING | IK10 RATING | CE | RoHS COMPLIANT | CIII | CID2 | CIID2





Product Specification

Model: FFD High-Temp Edition
Power: 100W / 120W / 130W / 150W / 160W / 180W / 200W
Warranty: 5 Year
Lumens: 15000-30000 lm
Efficacy: Up to 150 lm/W
Rating: IP 66, IK10
Certification: Class I Division 2, Groups A, B, C and D; Class II Division 2, Groups F, G , Class III
Operating Temp: -40°F – +149°F (-40°C – +65°C)
Voltage: 100–277VAC / 200–480VAC
CRI: 70 and 80
Rated Life: L70 >100,000 hours
Lens: Tempered Glass, PC
Beam Angle: 25° / 60° / 90° / 110°
Mounting Option: Pendant / Yoke / Ceiling / Stanchion / Wall / Pole

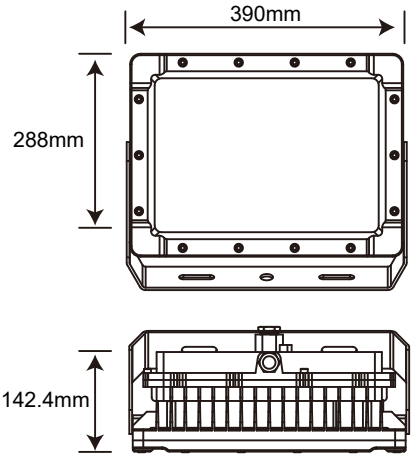

Key Feature

- **High temperature resistant up to 90°C**
- **IP66 & IK10 rated for harsh environments**
- **Explosion-proof structure, suitable for hazardous location**
- **Optional 100–200W power range**
- **Long lifespan >100,000 hours**
- **Multiple mounting options for flexible installation**

