SEATTLE

Street or Roadway LED Luminaire

DESIGN-FUNCTION-QUALITY









Crystal Lighting Corp.



Seattle Decorative Street or Roadway Luminaire

Seattle Luminaire is a decorative downlight luminaire constructed from Cast Aluminum, an Aluminum spun shade, and an acrylic teardrop refractor Lens with Type 3 or Type 5 Light distribution. The Optional Shade can block up light. Seattle Luminaire is perfect for Illuminating Streets or Roads.

- 10 year/100,000 hour limited warranty.

Features.

- Energy Savings: Over 66% compared to HID light sources.
- Improved lumen maintenance.
- High efficient LED's.
- Operating temperatures: -30°C ~ 60°C.
- Driver: Constant current, 120-277v, 50/60Hz, 480v (Optional).
- 10Kv Surge Protector. (standard).
- 7pin Photocell, Buttom Photo Cell and Wireless Controls capable (optional).
- Operating Life: >200,000 hours

Construction.

- Housing is Heavy-Duty Cast Aluminum Base.
- Heavy duty Spun Shade
- Powder Coat Finish (Standard). Custom finishes available (Custom).
- Clear Refractor Acrylic Lens (Standard), Clear refractor Polycarbonate Lens (optional).
- Silicone Gasket to prevent leakage and provide weather-tight protection.
- Light Distribution.
- -Type 3 or Type 5 (Per Order)

Average Height and Diameter

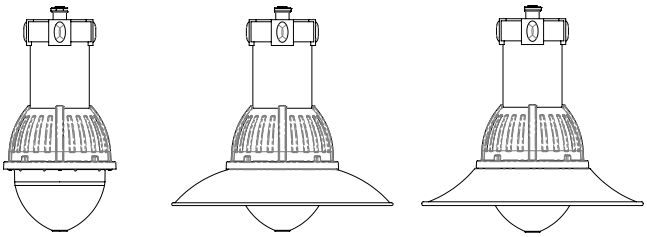

STTL-NSH STTL-SH1 STTL-SH2

Optic Distributions

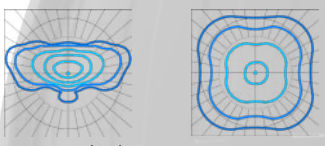

Type 3 (T3) Type 5 (T5)

Example: STTL-NSH-T3-100CLED-80CLED-30K-MV-BK-PC

Cat #	Shade	Light Dist.	Wattage	Color Temp.	Voltage	Finish	Options
STTL							
Seattle (STTL)	No Shade (NSH) Shade 1 (SH1) Shade 2 (SH2)	*Type 3 (T3) *Type 5 (T5)	20W (20CLED) 40W (40CLED) 50W (50CLED) 60W (60CLED) 80W (80CLED)	3000K (30K) 4000K (40K) 5000K (50K)	120-277V (MV) 480V (HV)	Black (BLK) White (WHT) Silver (SLR) Bronze (BRZ) Graphite (GPH) Custom (CST)	Buttom Photo Cell (PC) **7Pin Photocell Receptacle & Shoring Cap (7PCR) Wireless Control (WC)

* Type 3 and Type 5 type Refractor Acrylic Lens.
** 7pin PCR Mounted on the MAF or Pole Cap.

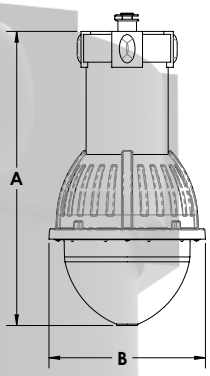

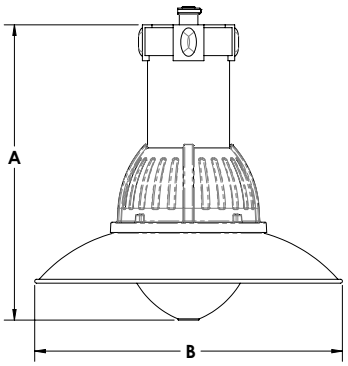

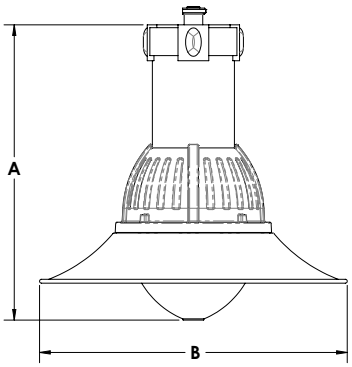

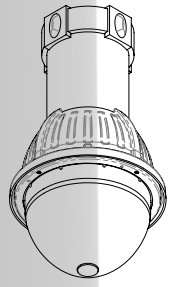

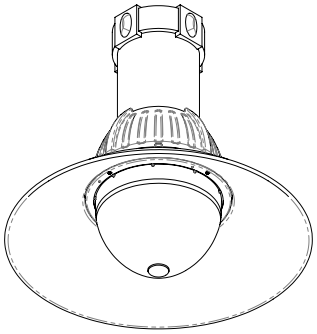

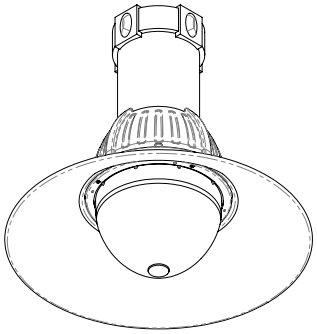

STTL Dimensions		
Cat #	A	B
STTL-NSH	28" 7/8	15" 1/4
STTL-SH1	28" 7/8	30
STTL-SH2	28" 7/8	30

Cat #	Input Power	Lumen Output	LPW	Color Temp. (CCT)	CRI	Rated Life (L70)	Imput Voltage	HID Equivalent	HID Equivalent
STTL-50CLED	55W	7,320	146	5000K	70+	>200,000	120-277V	50/60HZ	150W HPS
STTL-60CLED	65W	8,320	136	5000K	70+	>200,000	120-277V	50/60HZ	250W HPS
STTL-80CLED	85W	10,340	129	5000K	70+	>200,000	120-277V	50/60HZ	250W MH
STTL-100CLED	105W	14,640	146	5000K	70+	>200,000	120-277V	50/60HZ	400W PSMH
STTL-120CLED	125W	16,984	141	5000K	70+	>200,000	120-277V	50/60HZ	400W HPS