Decorative Aluminum Luminaire Mounting Device

and Single Wallmount Shepherd's Crook

LL-DE-DA-LMD-SC-PWMB18

Single Wallmount Shepherd's Crook

Available in 24” or 30” and is Constructed of Seamless Aluminum Tubing. Shepherd’s Crooks Include Factory Installed Rubber Grommets for Wire ways, Press-On End Caps and Set Screw Shaft Mounting Connections for Easy Orientation Adjustment in the Field.



EPA of Bracket (No Scrolls): 1.0
EPA of Bracket (Scrolls): 1.3
Weight Load: 65 lbs./Per Arm

PRODUCT INFORMATION		
Arm Material	**Warranty**	**Finish**
6061-T6 Aluminum Alloy 1 ½” SCH 80 Pipe	5 Year Limited Warranty on Paint Finish Only.	Super Durable Polyester Powdercoat Finish. Custom Finishes, Including Patinas & All RAL Colors (Adder).

NOTE: Contractor is Responsible for Field Drilling Holes in the Back Plate to Correspond with Variations in Mounting Boxes, Wall Material, and Location of the Fixture.

©Lite Lume Corporation 2018

LITELUME™ seeks to deliver the most advanced and efficient LED technology. Due to technology progression, specifications may change. We reserve the right to update product specifications without notice. Contact LITELUME™ for the most up-to-date data.

Decorative Aluminum Luminaire Mounting Device

and Single Wallmount Shepherd's Crook

DIMENSIONS

Single Wallmount Shepherd's Crook

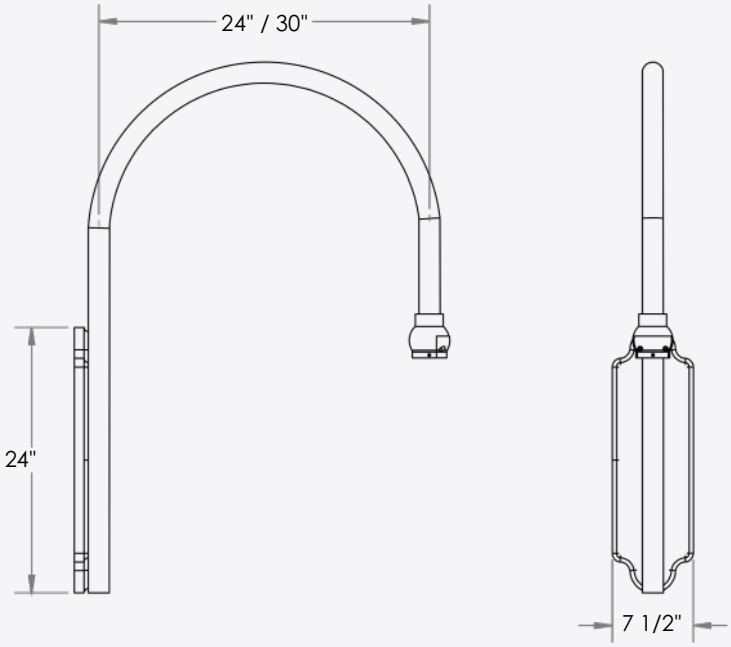

SCROLL OPTIONS

Scroll 1	Scroll 2	Scroll 3	Scroll 4	Scroll 5
				

24” Only Available in Scroll Option 2 or None Option Only.
30” Available In All Scroll Options or None.

©Lite Lume Corporation 2018

LITELUME™ seeks to deliver the most advanced and efficient LED technology. Due to technology progression, specifications may change. We reserve the right to update product specifications without notice. Contact LITELUME™ for the most up-to-date data.

Decorative Aluminum Luminaire Mounting Device

and Single Wallmount Shepherd's Crook

PROJECT NAME	
CATALOG #	
JOB TYPE	
PREPARED BY	
NOTES	

ORDERING GUIDE

Brand	Location	Type
LL LITELUME	**DE** Delaware	**DA** Decorative Aluminum

Style	Model
LMD Luminaire Mounting Device Knuckle Mount to Accept 2.5" Round Plumbizer Pendant Fixture	**SC-PWMB18** Single Wallmount Shepherd's Crook

# of Arms	Size	Scroll	Mount	Finish
SG Single	**24** 24” Arm* **30** 30” Arm *Only Available with Scroll 2 or Without Scroll	**N** None **SCR1** Scroll 1 **SCR2** Scroll 2 **SCR3** Scroll 3 **SCR4** Scroll 4 **SCR5** Scroll 5	**WM** Wallmount	**POWDER COAT COLORS** **BK** - Black Powder Coat **WH** - White Powder Coat **DBZ** - Dark Bronze Powder Coat **DGR** - Dark Green Powder Coat **GY** - Gray Powder Coat **CUS** - Custom Color* ** Provide RAL # or Sample Color Chip*

©Lite Lume Corporation 2018

LITELUME™ seeks to deliver the most advanced and efficient LED technology. Due to technology progression, specifications may change. We reserve the right to update product specifications without notice. Contact LITELUME™ for the most up-to-date data.