LED SION

Date:..... Location: .....

Product:..... Project:.....

Quantity:..... Catalog# .....

SOLAR LED POST TOP light





SUITABLE APPLICATIONS

- Suitable for parks and recreation centers.
- Community condo drive ways.
- Remote area which has no electricity cables.



Features:

1. The lamp adopts integrated structure design, with better heat dissipation design and longer life;
2. Using LUXEON 3030 lamp beads, the whole lighting effect is up to 100lm/W;
3. This solar panel adopts monocrystalline silicon material, featuring high conversion efficiency of up to 18% and a service lifespan of 25 years.
4. Adopting state-of-the-art MPPT tracking control technology enhances system efficiency while lowering overall costs.
5. It supports light control, timing control, dimming adjustment, intelligent power saving and dawn light mode.
6. Solar controller built-in lightning protection module;
7. Adopting ternary lithium battery technology, it features large battery capacity.
8. 365 days of non-interrupted power supply.

PERFORMANCE

Model NO	Wattage	Battery	Solar Panel	Light Efficiency	Kelvin Options
SPT50W57K	50W	18650 LiFePO4	50W / 18V Monocrystalline Silicon	100LM/W	5700K

LED SION LIGHTING

Electric Characteristic

Specification/Model	SPT50W57K
Battery	18650 LiFeP04
Beam angle	100x100°
Pole diameter	2.36"
Light output	50W
Luminous flux(lm)	4500-5000LM
Color Temperature	5700K
Solar panel	30W /18V monocrystalline silicon
CRI	80RA
Chip Brand	LUXEON 3030
LED Quantity(PCS)	96
Control Model	Time control + Light sensor control + Motion sensor control
Operating time	>12 hours ,Intelligent mode 3-4 days (Affected by local use environment and sunlight)
Material	Die Casting Aluminum
Luminous efficiency(lm/w)	100
Lifespan(hrs)	>20000
IP Rating	IP65
Light body color	Black
Installation height	3~5M
Size(mm)	L20.87*W20.87*H5.75inch
Net Weigh(kg)	8.0
Package Size(mm)	L26.18*W23.62*H5.12inch
Package Quantity(Pcs)	1.0
Gross Weigh(kg)	9.2
Warranty	2 years

Electric Characteristic

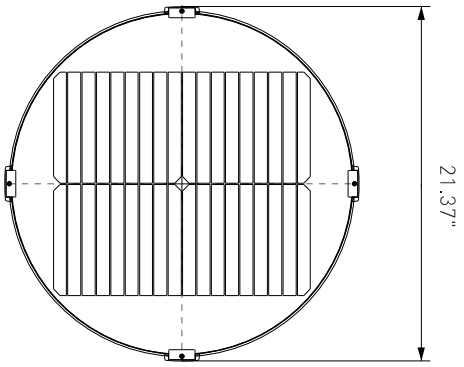

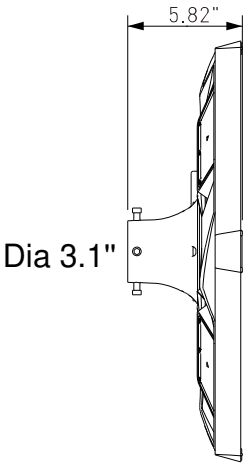

DISTRIBUTION DIAGRAM

INTENSITY DISTRIBUTION DIAGRAM IN C-PLANE

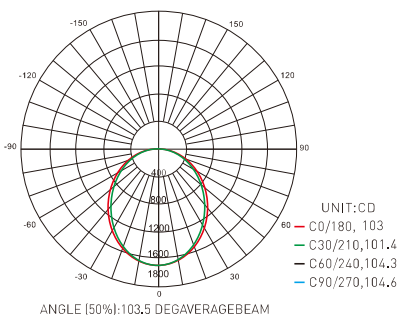

ANGLE (50%):103.5 DEGAVERAGEBEAM

MAX INTENSITY CONE SURFACE DISTRIBUTION DIAGRAM

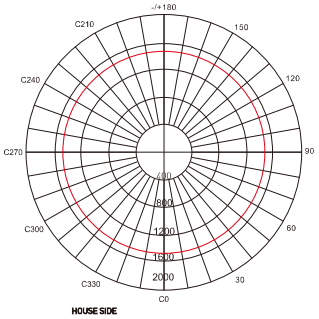

3-Stage night mode with PIR

Period	Duration	Brightness (Motion detected)	Brightness (No motion)	Hold Time
1	4 hours	100%	10%	10 seconds
2	4 hours	50%	10%	10 seconds
3	8 hours	30%	10%	10 seconds

Control Modes

Combined timing control, light sensor control and human body induction control.

Timing Control: Supports up to 5 adjustable time periods for more user-friendly operation and better energy conservation.

Light Sensor Control: The light automatically turns on at dusk when the voltage of solar panel battery drops below 3V.

Motion Sensor Control: Intelligent induction energy-saving mode. The light outputs full 100% brightness when human movement is detected; it switches to low-power energy-saving state with adjustable brightness from 10% to 100% when no movement is detected.





Operating & Storage Conditions

Operating Ambient: Temperature: -10°C ~ +45°C; Relative Humidity: 20%~90%

Storage Ambient: Temperature: -10°C ~ +35°C; Relative Humidity: 5%~95%

Battery Storage Note: Charge the battery once every 3 months during storage. Max storage period is 12 months. All products exceeding the storage period shall be re-inspected before use.

Installation Height: Applicable for mounting height of 3~5 meters

Warnings

1.Do not install in high-temperature, enclosed or poorly ventilated places
2.Avoid installation under trees or any sheltered areas. Ensure the solar panel is fully exposed to sunlight without obstructions.
3.Conduct regular charge and discharge maintenance every 3 months for warehouse-stored products.
4.Please contact professional technicians for troubleshooting once faults occur.
5.Waste products must be handed over to relevant authorities for unified centralized disposal.

Lamp Internal Wiring Diagram

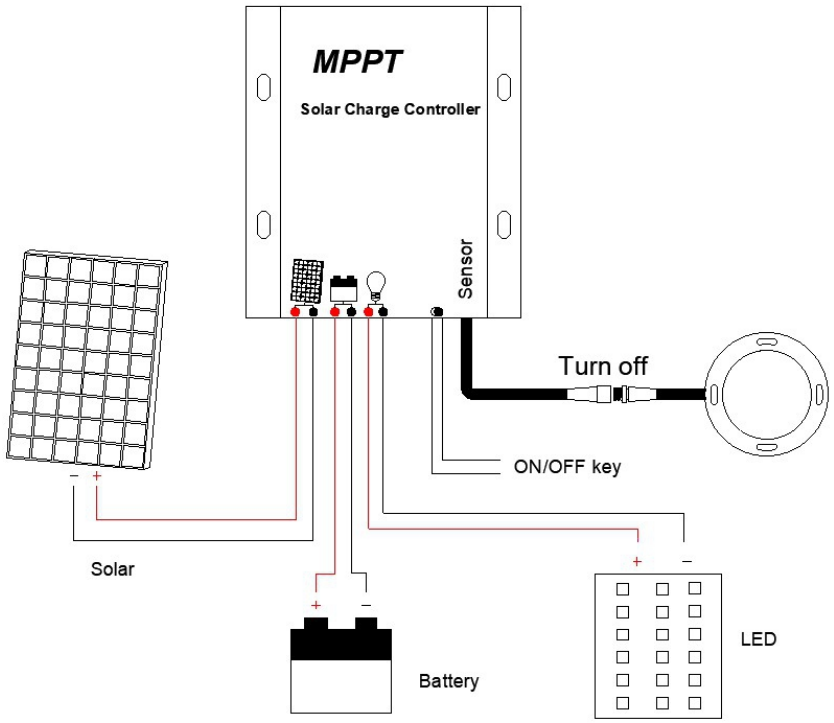

Installation Instructions

Solar LED Street Light

User Instructions

1.When opening the package, please ensure the light is intact without any damage. If any damage is found, do not install the product.
2.The storage temperature of the lamp is -10℃ to 35℃, and the operating temperature ranges from -10℃ to 45℃.
3.The installation position shall have sufficient light without obstructions, and the normal effective illumination duration is 6-8 hours.
4.With sufficient natural light and normal charge-discharge use, the product enjoys a 3-year warranty.
5.This lamp is equipped with PC accessories, please handle it with care.

Installation Instruction

It is suggested that the LED street lights should be installed by specialized persons according to the instructions.

Step 1:
Please place the adapter onto the lamp body and align it with the four screw holes.

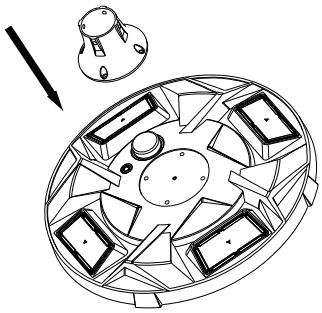

Step 2:
Insert four M8 screws into the holes, then fasten them with tools to secure the adapter to the lamp body.

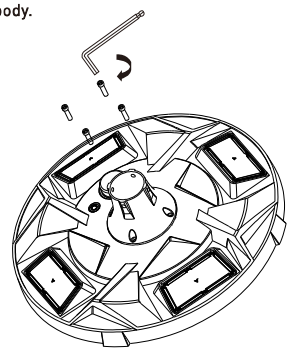

Step 3:
Install the lamp on poles with a height of 3 to 5 meters.

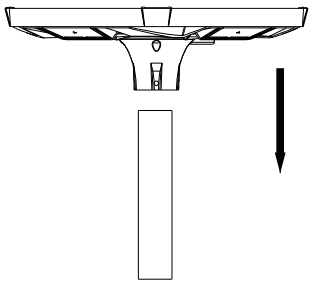

Step 4:
Tighten four M8 screws on the adapter with a tool to fix the adapter and light pole firmly.

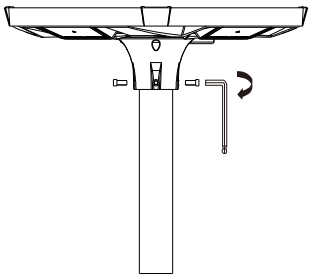

Step 5:
Reminder: Press the switch down to turn on, press it up to turn off.

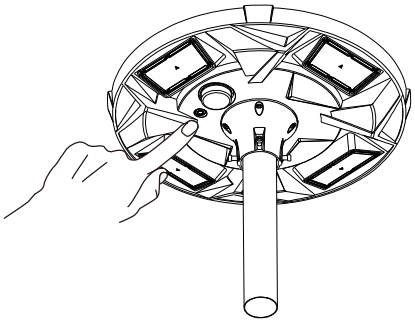

Step 6:
You will see the indicator light flash inside the microwave sensor, and the lamp will light up automatically at night. The installation is completed now.

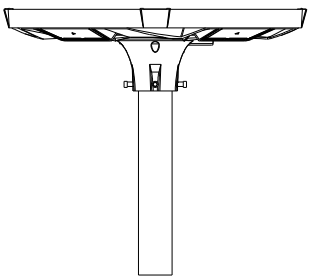

Work scenario

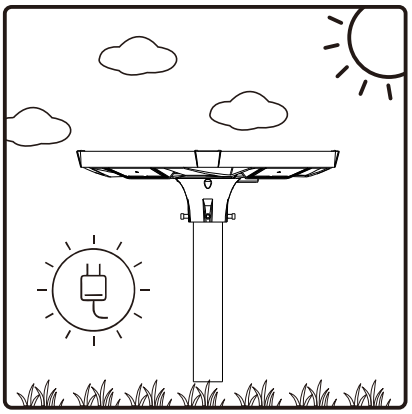

The solar panel charges during sunny days. The lamp operates at night using power stored in the battery.

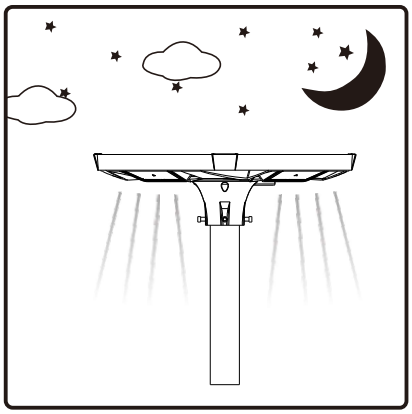

When people move 8-10 meters away and stay for a set period, the lamp dims to preset brightness.

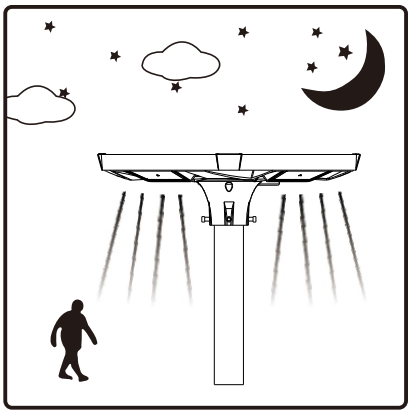

When people approach within 8-10 meters, the lamp switches to full brightness instantly.